Market Update Note

MUN2016-07-11

New Fuel Gas Supply System

New FGSS configuration promises attractive CAPEX-oriented alternatives to the established FGSS used so far for ME-GI powered vessels

As a result of the long term agreement between MAN Diesel & Turbo and Burckhardt Compression entered in 2006, Burckhardt has developed compressor solutions for both smaller and larger LNG carriers. The compressors are designed to feed boil-off gas (BOG) to the ME-GI engine at a high pressure, while simultaneously feeding dual-fuel GenSets with a low pressure. The compressors can optionally also feed a partial or a full reliquefaction system.

In the recent past, many new large LNG carriers have been specified with ME-GI main propulsion engines and Burckhardt compressors. With their Laby®-GI compressor design, Burckhardt Compression has positioned itself as provider of the leading FGSS solution which has become the standard aboard large LNG carriers.

On board such LNG carriers, the Laby®-GI compressor, which is fed with boil-off gas, is supplemented with a cryogenic pump and a high-pressure evaporator train, which is fed with cold liquid gas. The combined system is shown in Fig. 1.

For non-LNG carriers with ME-GI engines, an FGSS with only cryogenic pumps and a high-pressure evaporator is applied. Unlike LNG carriers with their large cargo tanks, such vessels carry relatively small fuel gas amounts in pressureable type-C tanks. A gradual pressure build-up in the type-C tanks is is therefore permitted. The boil-off gas can be fed directly to the

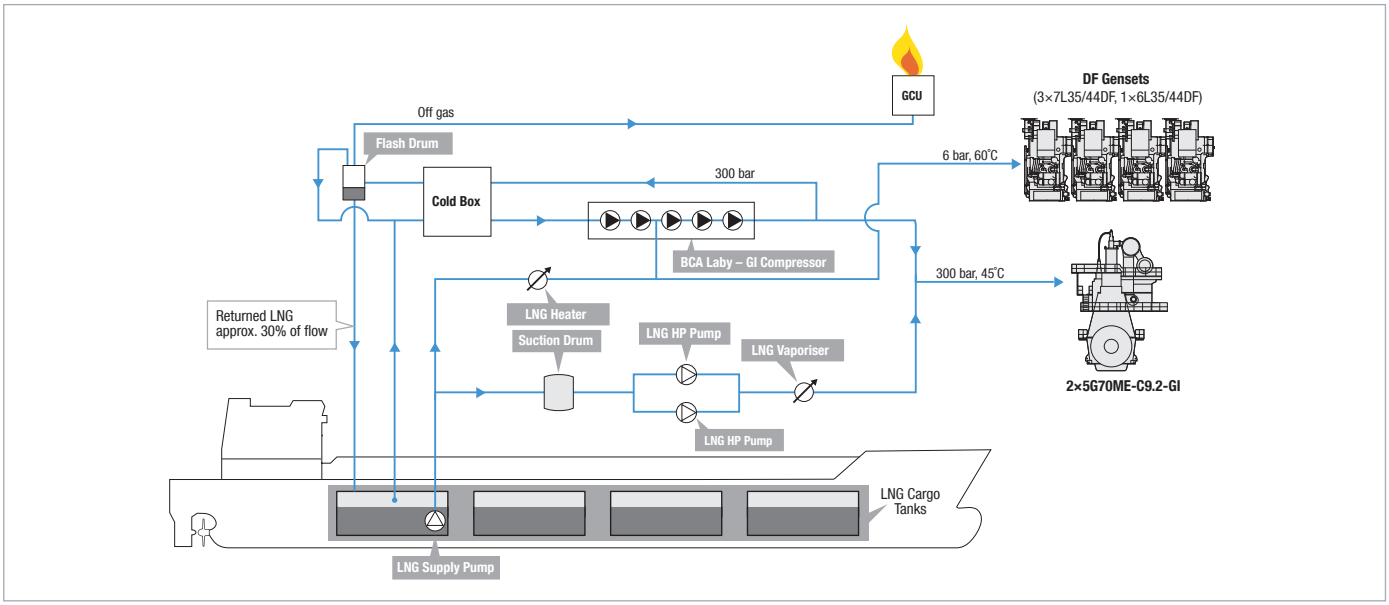

Fig. 1: Typical fuel gas supply system for LNG carriers

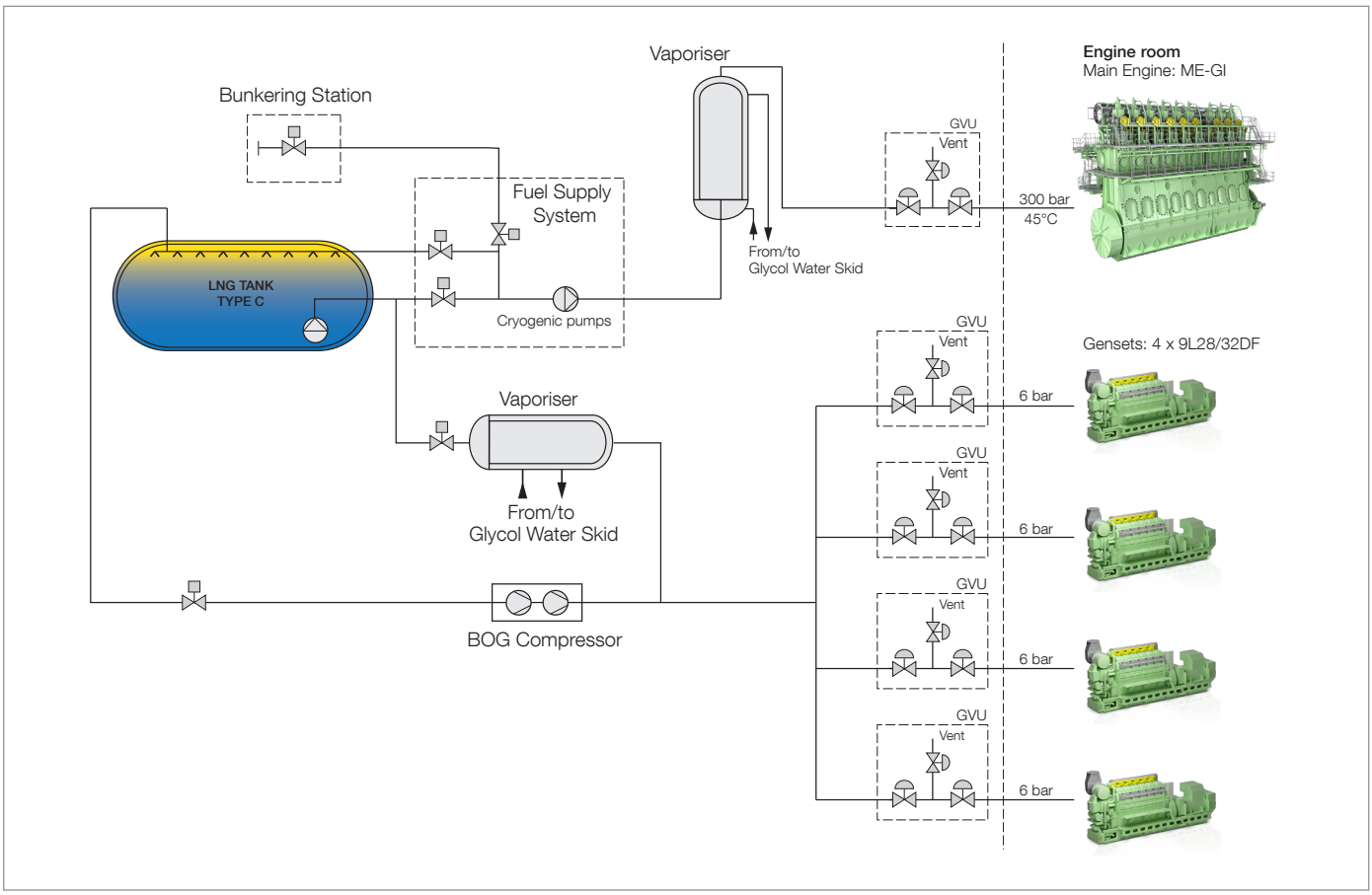

Fig. 2: Typical fuel gas supply system for non-LNG carriers

gensets. Fig. 2 shows the typical components of an installation for a non-LNG carrier.

The FGSS combinations available today for the ME-GI have proven reliable, efficient and of low maintenance. Not the least driven by the low gas prices, shipowners increasingly ask for CAPEX-optimised solutions as an alternative.

MAN Diesel & Turbo and Burckhardt Compression have therefore initiated a development process for a simple FGSS for both ME-GI powered LNG carriers as well as other ME-GI powered vessels.

For this purpose, Burckhardt Compression has developed a CT-compressor design solution based on trunk piston technology. It offers a low CAPEX at a reasonable operational eficiency. For a 170-180.000 m^3 LNG carrier, a package comprising three to five modules each consisting of two compressors driven by one electric motor is foreseen, see Fig. 3.

For an optimum turn-down power curve, the motors can be equipped with a variable frequency drive. The application of multiple compressors opens interesting partial redundancy options. Depending on the specific setup, and as an alternative to the Laby®-GI, the CT-design can contribute to a tangible CAPEX reduction for the complete propulsion system.

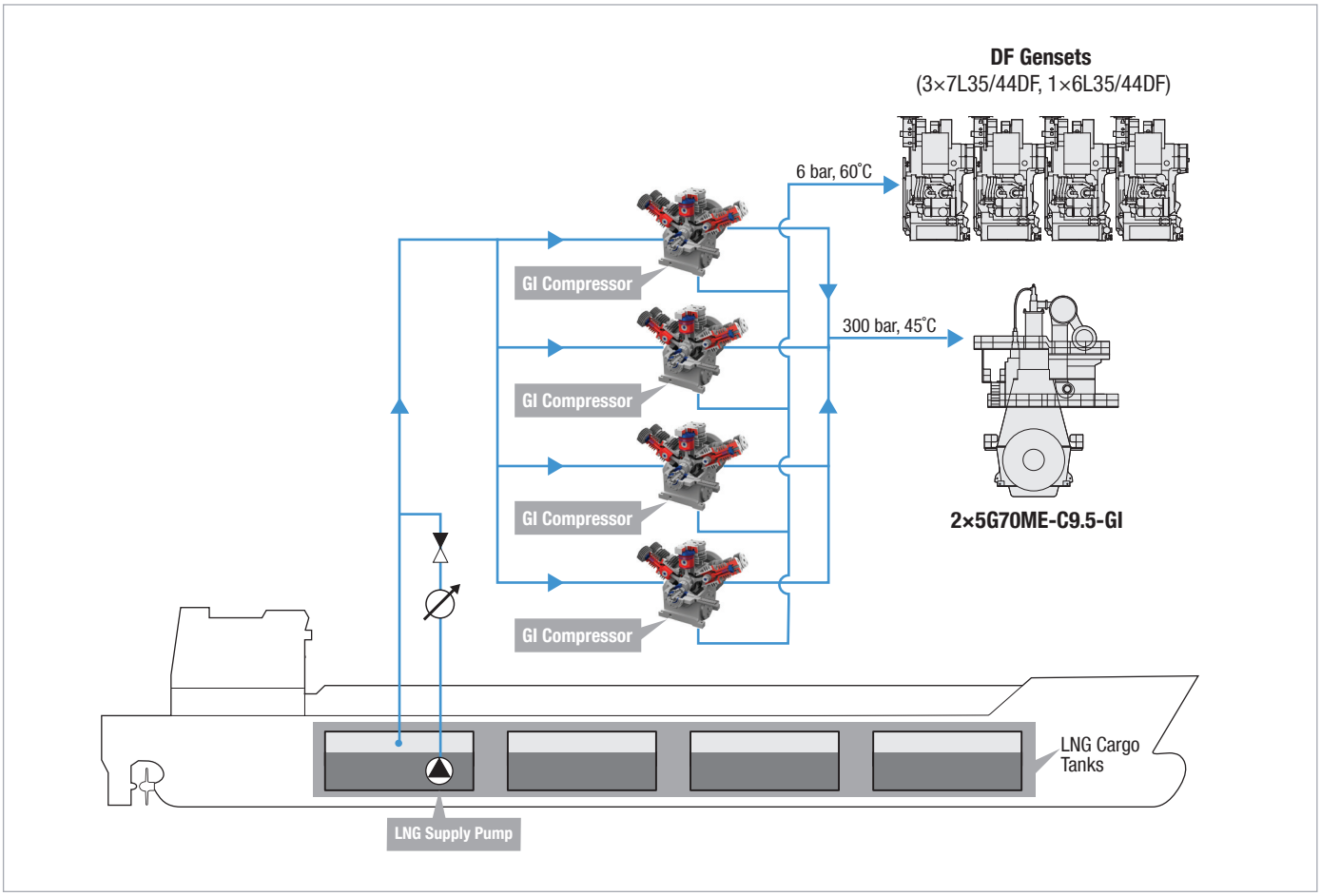

Fig. 3: Proposed CT fuel gas compressor for 174 kcum LNGC with ME-GI

Normal in-between maintenance work on the CT-compressors can be performed by the engineers on board. The maintenance cycle of the CT compressor is higher than on the Laby®-GI, though still manageable, which can make this design an attractive alternative.

As with the Laby®-GI solution, a partial reliquefaction system can be built in without requiring an additional compressor.

For other than LNG carriers, such as ME-GI powered vessels, where continuous handling of boil-off gas from the tanks is not required, the cryogenic pump and evaporator will prevail. For such applications MAN Diesel & Turbo has developed its own combined cryogenic pump and vaporiser system, the so-called PVS, and thereby simplified the whole FGSS.

Fig. 4 (left) shows the FGSS installed at the Diesel Research Centre in Copenhagen. This system has a space requirement of some 60 cubic metres, whereas the in-house developed new compact PVS for the same capacity needs only 8 cubic metres, see Fig. 4 (right).

MAN Diesel & Turbo and Burckhardt Compression foresee a growing market for fuel gas supply systems, incl BOG handling aboard a wide range of gas-fuelled ME-GI powered ships including container vessels, tankers, car-carriers and bulk carriers. The combination of the ME-GI engine with the solutions outlined above offers efficient and price competitive alternatives for the marine industry, also targeting the small market segment for CNG vessels.

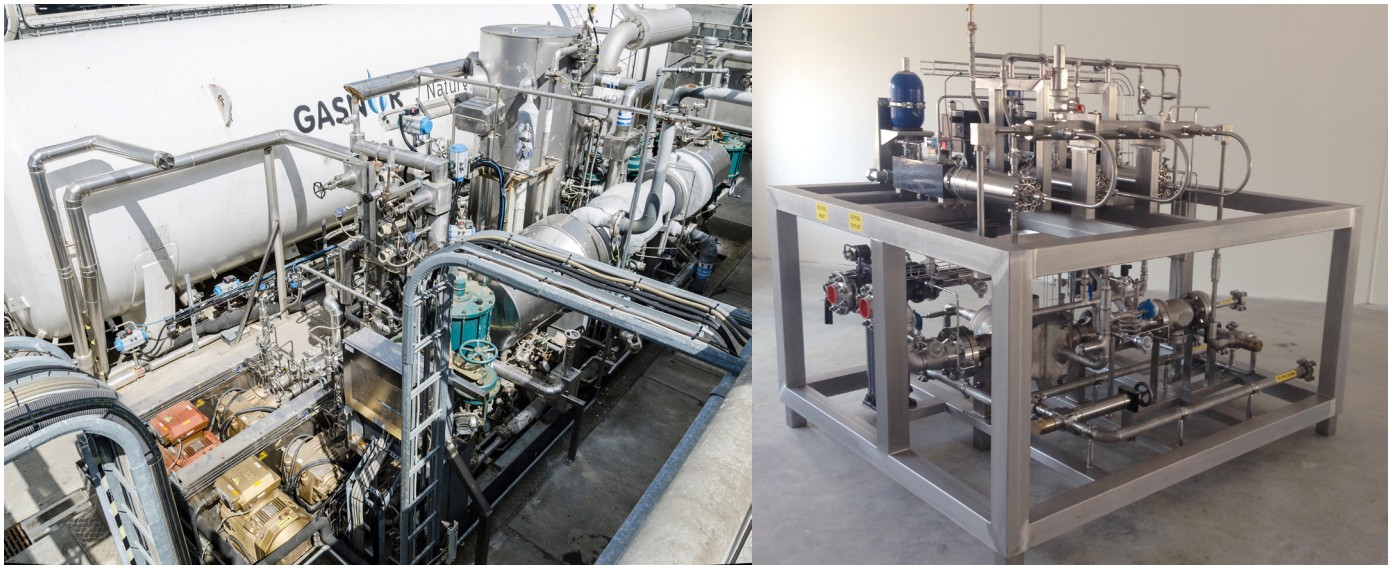

Fig. 4: Left: Example of the existing FGSS. Right: New pump vaporiser system, PVS and ME-GI FGSS

For more details:

MAN Diesel & Turbo
Teglholmsgade 41
2450 Copenhagen SV, Denmark
Phone +45 33 85 11 00
Fax +45 33 85 10 30
info-cph@mandieselturbo.com
www.mandieselturbo.com