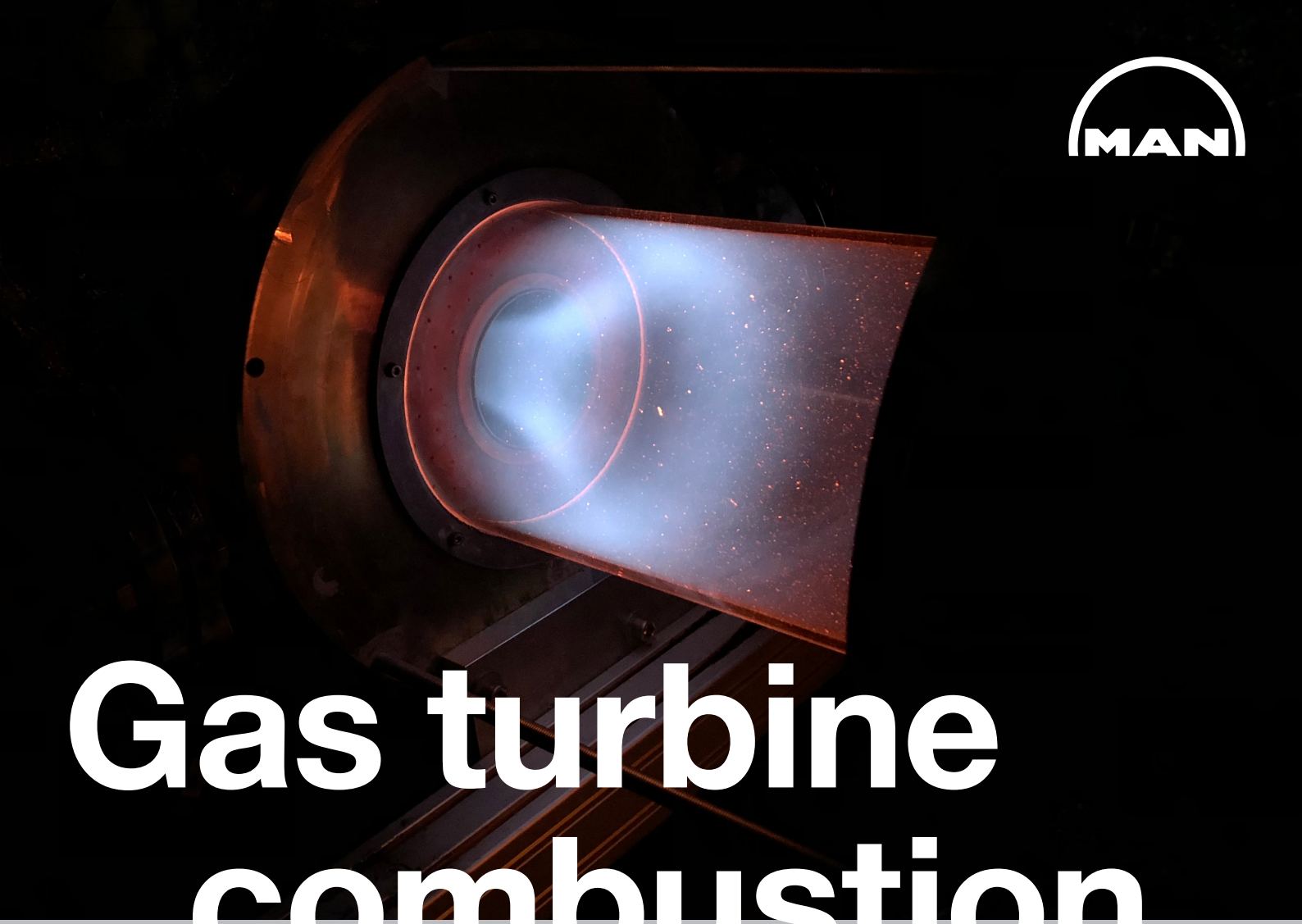

Gas turbine combustion technology

MAN Energy Solutions
Future in the making

Gas turbines
turbomachinery

Gas turbine combustion technology makes the difference

The reduction of environmentally critical emissions is a key challenge in gas turbine development. Based on the vast experience of more than 50 million operating hours of 700 gas turbines installed worldwide. MAN Energy Solutions (MAN ES) engineers have developed a unique dry low emission combustion technology that makes the difference.

MAN ES Gas Turbines (MGT series) feature single digit NO_x emissions and are known for excellent fuel as well as load flexibility.

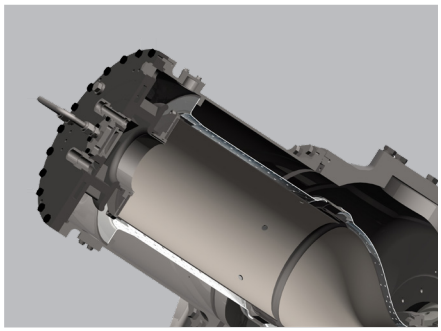

Did you know?
NO_x emissions are very strictly regulated in most countries of the world. The MGT-family features NO_x emissions far below the active regulations in most countries and meets the strictest regulations worldwide. These emission levels are typically normalized to 15% O_2 for gas turbine applications. Please contact us if you need assistance.

Challenge	Background	Solution
Strict pollutant emissions regulations	Pollutants are combustion products that are formed in the flame. Featuring low emissions in terms of NO_x, CO, UHC and particles at the same time for a wide operation range is a major challenge.	The combustor system operates with extremely low emissions for a wide operation range by standard. Single digit NO_x emissions (<9ppm) are available.
Utilization of unconventional fuels	Fuels like LPG, ethane-rich gases, and hydrogen cause challenges like flash back, flame stability and increased emissions.	The ACC technology features outstanding fuel flexibility while maintaining stability and emission performance.
Operational flexibility and fast load changes	Interruptions in the fuel-gas supply or disturbances in the grid can lead to shutdowns of the gas turbine and in the worst-case stop your production process. Load rejections from the grid challenge the flame stability of low emission combustors.	To be independent of a single fuel source, we offer dual fuel capabilities. Online fuel switch over is possible at all load conditions (<90% load). Our gas turbines offer a wide operation range without restricted operation points. In case of grid disturbances, the combustion system stays stable even in case of instant load jumps or switchover to island operation mode.

The Advanced Can Combustion (ACC) system developed by MAN ES applies advanced lean premixing, which reduces the peak flame temperature in the main reaction zone. The ACC technology is characterized by fuel flexibility and a broad operational flexibility while sustaining low emissions. We offer a solution for each of your challenges.

MAN ES has the technology to cope with these challenges and to power your business reliably. Our combustors are robust and service-friendly. The heavily loaded hot-gas parts are designed for a life cycle of min. 40,000 equivalent operating hours.

The latest members of the MGT gas turbine series are driven by a cutting-edge version of the ACC system. Sophisticated cooling and premixing technology has been implemented to deal with the increased temperature and pressure for higher ratings and highest efficiencies.

Did you know?

Upgrading the combustor hardware for new fuel compositions is easy. All parts of the ACC combustion system can be exchanged without opening the main casing. That means no risk to your investment. The core turbine is fit for the future today, even for 100% hydrogen.

The low emission ACC dual-fuel combustion technology emits low NO_X, CO, UHC, and particle emissions for liquid and gasous fuels. The system allows for a start-up on liquid fuel without requiring an additional gas-bottle ignition system. The purge system reliably protects the fuel nozzles from coking and relies on standard shop-air only. When initiated, the fuel switchover between natural gas and liquid fuel is achieved within 60 seconds at any load lower than 90%. Furthermore, the emission performance on natural gas remains excellent for the dual-fuel production variant.

Did you know?

Our gas turbines keep their excellent low emission performance even at very low ambient temperatures below -20°C (-4°F) or at other extreme ambient conditions. Please contact us if you need more information!

Innovative combustion technology paves the way for solutions with less or even zero greenhouse gas emissions. To achieve a high utilization of available fuels, our gas turbine combustion systems can burn a wide range of gaseous and liquid fuels with low pollutant emissions. Our standard package can already handle a large variety of mixtures of standard natural gas and other gases. Further options are available.

Standard MGT Fuel Capabilities

Inert Content (e.g., N_2, CO_2)	< 30 vol%	**NO_x <18mg/Nm³ (< 9 ppm)** **CO <20mg/Nm³ (<16 ppm)** **UHC <20mg/Nm³ (<28 ppm)**
Hydrogen (H_2)	< 20 vol%	
Heavy hydrocarbon (C_{2+})	< 15 vol%	
Liquid fuel (e.g., Diesel No.2)	100%	**NO_x <200mg/Nm³ (<97 ppm)** **CO <30mg/Nm³ (<24 ppm)** **UHC <30mg/Nm³ (<42 ppm)**

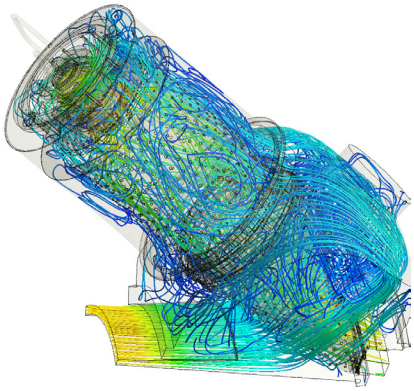

Numerical simulation of one out of six can combustion chambers of the MGT. Colors indicate the flow velocities. Simulation is used to optimize the cooling and thereby the lifetime of the combustor parts.

Did you know?

All new MAN gas turbine packages with ACC technology can handle a mix of natural gas and 20% hydrogen for example generated by renewable energy. We are working on low emission combustion solutions for even 100% hydrogen applying 3D-printed combustion parts.

MAN Energy Solutions is a German company with a strong heritage going back to the year 1758 and, hence, developing new and innovative technology is part of our DNA. We are constantly pushing the limits of combustion technology for industrial gas turbines.

Did you know?
Depending on your needs and specifications, we can adapt our standard combustion monitoring system and standard system components to account for your specific application.

We are applying sophisticated numerical simulations in our daily development work to serve the customer's needs. At the same time, we are cooperating with world leading combustion institutes that utilize one of the fastest super computers in the world.

Did you know?
Our ACC system can start the gas turbine with any compliant fuel. No extra start system needed.

Moreover, realistic experimental validation tests are conducted at full engine load, pressure, and temperature conditions. We account for flame stability and emissions early in the design process. This detailed development and validation process is leveraging new technology to make the difference.

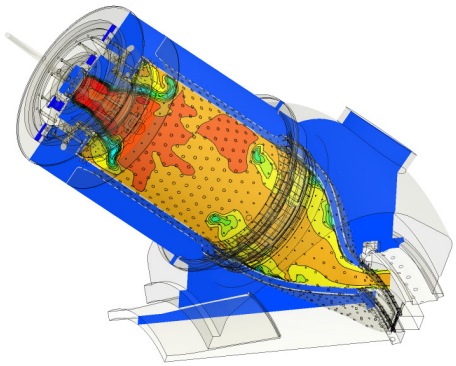

Sophisticated unsteady simulation of the temperature distribution inside the combustor. ACC technology features an extremely uniform temperature distribution, which leads to low emissions and allows for high turbine efficiencies.

Standard power generation gas turbine package for outdoor installation.

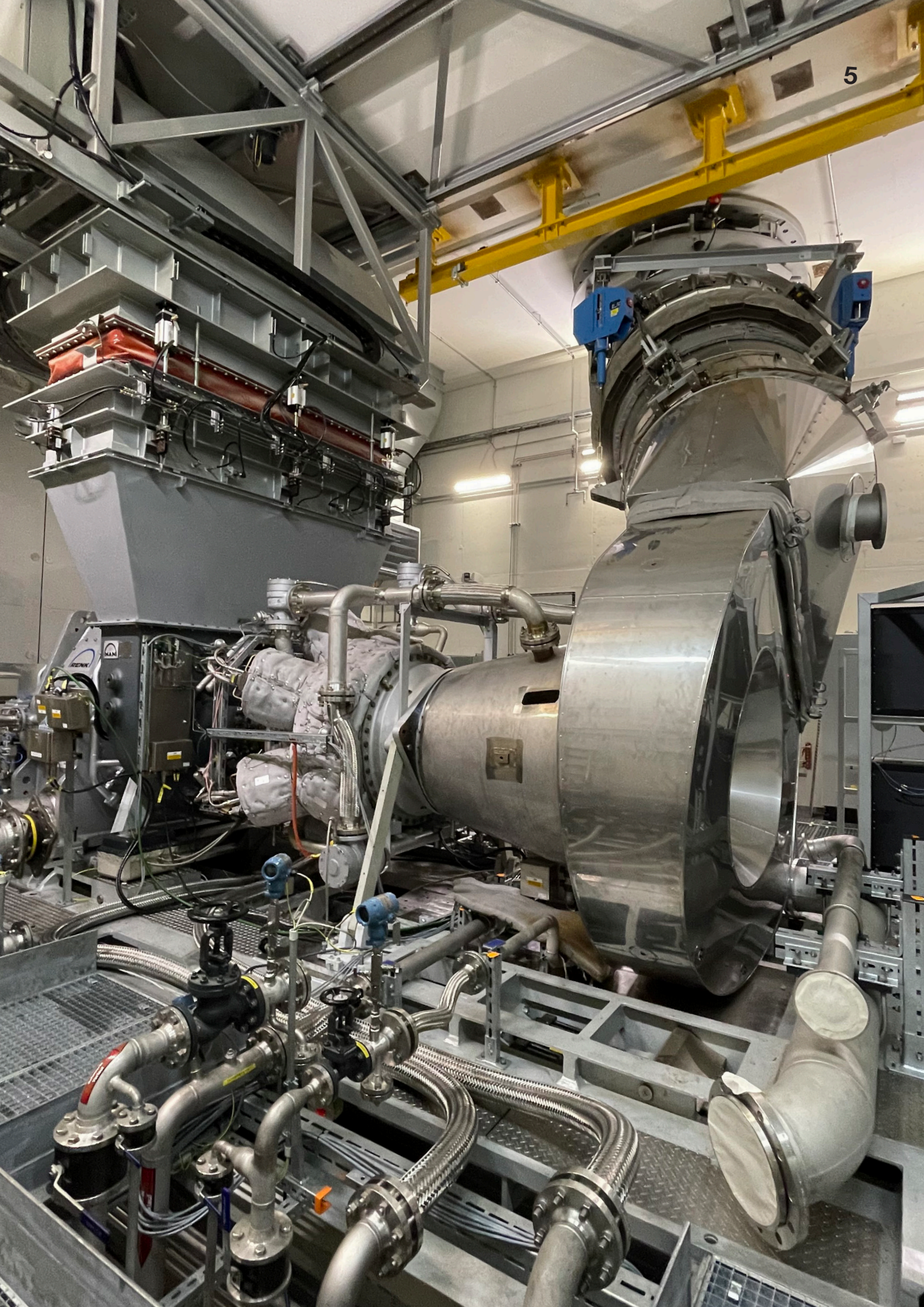

MAN Energy Solutions
86224 Augsburg, Germany
P + 49 821 322-0
F + 49 821 322-3382
info@man-es.com
www.man-es.com

MAN Energy Solutions
Steinbrinkstr. 1
46145 Oberhausen, Germany
P + 49 208 692-01
F + 49 208 669-021
turbomachinery@man-es.com
www.man-es.com

D02088002EN Printed in Germany 11200.5