Technical Documentation

Project Guide

Project Guide

Design Specification: ..... **GenSet**
Plant No..... **L23/30H**
Date **2025-10-30**

While remaining the same legal entity, MAN Energy Solutions has been renamed to Everllence and its products are being rebranded from “MAN” and/or “MAN Energy Solutions” to “Everllence”. As this is an ongoing process, any reference to “MAN” and/or “MAN Energy Solutions” is actually a reference to “Everllence”.

All data provided in this document is non-binding. This data serves informational purposes only and is especially not guaranteed in any way. Depending on the subsequent specific individual projects, the relevant data may be subject to changes and will be assessed and determined individually for each project. This will depend on the particular characteristics of each individual project, especially specific site and operational conditions.

2025-10-30

Original instructions

Everllence
H. Christoffersensvej 6
4960 Holeby
Denmark

Phone +45 54 69 31 00
Fax +45 54 69 30 30
www.everllence.com

Copyright © 2025 Everllence
All rights reserved, including reprinting, copying (Xerox/microfiche) and translation.

2025-10-30

Table of contents

I 00 Introduction

Introduction to project guide ..... I 00 00 0
Safety precautions ..... I 00 01 0
Marine engine programme ..... I 00 02 0
Key for engine designation ..... I 00 05 0
Designation of cylinders ..... I 00 15 0
Code identification for instruments ..... I 00 20 0
Symbols for piping ..... I 00 25 0

D 10 General information

List of capacities ..... D 10 05 0
List of capacities ..... D 10 05 0
Vibration limits and measurements ..... D 10 24 0
Description of sound measurements ..... D 10 25 0
Description of structure-borne noise ..... D 10 25 0
Exhaust gas components ..... D 10 28 0
NOx emission ..... D 10 28 0
Moment of inertia ..... D 10 30 0
Inclination of engines ..... D 10 32 0
Green Passport ..... D 10 33 0
GenSet extension of TBO (Time Between Overhaul) ..... D 10 35 0
Overhaul recommendation, Maintenance and Expected life time ..... D 10 35 0
Overhaul recommendation, Maintenance and Expected life time ..... D 10 35 0
Overhaul recommendation, Maintenance and Expected life time ..... D 10 35 0
Overhaul recommendation, Maintenance and Expected life time ..... D 10 35 0

B 10 Basic diesel engine

Power, outputs, speed ..... B 10 01 1
Power take-off (PTO) ..... B 10 01 1
General description ..... B 10 01 1
Cross section ..... B 10 01 1
Main particulars ..... B 10 01 1
Dimensions and weights ..... B 10 01 1
Centre of gravity ..... B 10 01 1
Overhaul areas ..... B 10 01 1
Low dismantling height ..... B 10 01 1
Engine rotation clockwise ..... B 10 11 1

2025-10-30

B 11 Fuel oil system

Internal fuel oil system ..... B 11 00 0
Fuel application ..... B 11 00 0
Setting the heavy fuel oil supply system 010.000.023-25
Fuel oil system ..... B 11 00 0
Fuel oil system ..... B 11 00 0
Part-load optimisation - PLO ..... B 11 00 0
Residual fuel (HFO) specification 010.000.023-05
Marine diesel oil (DMB, DFB) specifications 010.000.023-04
Diesel fuel (DMA, DFA) specifications 010.000.023-01
Non-standardised fuels 010.000.023-02
Description for biofuels ..... B 11 00 0
Crude oil specification ..... B 11 00 0
Viscosity-temperature diagram (VT diagram) 010.000.023-06
Guidelines regarding operation on low sulphur fuel oil ..... B 11 00 0
Aging curve ..... B 11 01 0
Calculation of specific fuel oil consumption (SFOC) ..... B 11 01 0
Fuel oil consumption for emissions standard ..... B 11 01 0
MDO / MGO cooler ..... E 11 06 1
HFO/MDO changing valves (V1 and V2) ..... E 11 10 1
Automatic back-flush filter ..... P 11 02 1
Automatic back-flush filter ..... P 11 02 1

B 12 Lubricating oil system

Internal lubricating oil system ..... B 12 00 0
Crankcase ventilation ..... B 12 00 0
Lubricating oil in base frame ..... B 12 01 1
Lubricating oil in base frame ..... B 12 01 1
Prelubricating pump ..... B 12 07 0
Lubricating oil (SAE 40) specification for residual fuel operation (HFO) 010.000.023-11
Lubricating oil (SAE 40) specification for operation with DMA/DMB, DFA, DFB 010.000.023-07
Specific lubricating oil consumption - SLOC ..... B 12 15 0
Separator unit ..... B 12 15 0
Treatment and maintenance of lubricating oil ..... B 12 15 0
Criteria for cleaning/exchange of lubricating oil ..... B 12 15 0
By-pass depth filter ..... E 12 15 1

B 13 Cooling water system

Internal cooling water system ..... B 13 00 0
Internal cooling water system 1 ..... B 13 00 1

2025-10-30

Internal cooling water system 2 ..... B 13 00 2
Specification of engine coolant 010.000.023-13
Coolant inspecting 010.000.002-03
Coolant system cleaning 010.000.002-04
One string central cooling water system ..... B 13 00 0
Central cooling system ..... B 13 00 0
Jacket water cooling system ..... B 13 00 0
Expansion tank ..... B 13 00 0
Preheater arrangement in high temperature system ..... B 13 23 1
Expansion tank pressurized ..... T 13 01 1

B 14 Compressed air system

Compressed air system ..... B 14 00 0
Compressed air system ..... B 14 00 0
Specification of compressed air 010.000.023-21
Starting air system ..... B 14 00 0

B 15 Combustion air system

Combustion air system ..... B 15 00 0
Condensate amount ..... B 15 00 0
Specifications of intake air (combustion air) 010.000.023-17
Engine room ventilation and combustion air ..... B 15 00 0
Turbocharger - make MAN ..... B 15 01 1
Water washing of turbocharger - compressor ..... B 15 05 1

B 16 Exhaust gas system

Exhaust gas system ..... B 16 00 0
Pressure drop in exhaust gas system ..... B 16 00 0
SCR (Selective Catalytic Reduction) ..... B 16 00 0
Equipment to optimize performance ..... B 16 00 0
Charge air blow off device ..... B 16 00 0
Cleaning the turbocharger in service - turbine side ..... B 16 01 3
Position of gas outlet on turbocharger ..... B 16 02 0

B 17 Speed control system

Starting of engine ..... B 17 00 0
Governor ..... B 17 01 4

B 18 Monitoring equipment

Standard instrumentation ..... B 18 01 1
Standard instrument panel ..... B 18 05 1

2025-10-30

B 19 Safety and control system

Power supply and distribution ..... B 19 00 0
Cybersecurity guidelines ..... B 19 00 0
Mechanical overspeed ..... B 19 06 1
Local starting box - No 1 ..... B 19 10 1
Converter for engine RPM signal ..... B 19 13 1
Oil mist detector ..... B 19 22 1
Engine control box no 1 ..... E 19 06 4
Engine control box no 2, safety- and alarm system ..... E 19 06 6
Combined box with prelubricating oil pump, preheater and el turning device ..... E 19 07 2
Prelubricating oil pump starting box ..... E 19 11 0
High temperature preheater control box ..... E 19 13 0

B 20 Foundation

Recommendations concerning steel foundations for resilient mounted GenSets ..... B 20 01 0
Resilient mounting of generating sets ..... B 20 01 3

B 21 Test running

Shop test programme for marine GenSets ..... B 21 01 1

E 23 Spare parts

Weight and dimensions of principal parts ..... E 23 00 0
Standard spare parts ..... P 23 01 1
Standard spare parts ..... P 23 01 1

P 24 Tools

Introduction to spare part plates for tools ..... P 24 00 0
Standard tools for normal maintenance ..... P 24 01 1
Additional tools ..... P 24 03 9
Hand tools ..... P 24 05 1

B 50 Alternator

Information from the alternator supplier ..... G 50 02 8
Engine/Alternator type ..... G 50 02 3
Alternator cable installation ..... BG 50 00 0
Combinations of engine- and alternator layout ..... BG 50 00 0

B 98 Preservation and packing

Lifting instruction ..... P 98 05 1

2025-10-30

Introduction to project guide

Introduction

Our project guides provide customers and consultants with information and data when planning new plants incorporating four-stroke engines from the current Everllence engine programme. On account of the modifications associated with upgrading of our project guides, the contents of the specific edition hereof will remain valid for a limited time only.

Every care is taken to ensure that all information in this project guide is present and correct.

For actual projects you will receive the latest project guide editions in each case together with our quotation specification or together with the documents for order processing.

All figures, values, measurements and/or other information about performance stated in the project guides are for guidance only and shall not be used for detailed design purposes or as a substitute for specific drawings and instructions prepared for such purposes. Everllence makes no representations or warranties either express or implied, as to the accuracy, completeness, quality or fitness for any particular purpose of the information contained in the project guides.

Everllence will issue an installation manual with all project related drawings and installation instructions when the contract documentation has been completed.

The installation manual will comprise all necessary drawings, piping diagrams, cable plans and specifications of our supply.

Everllence four-stroke small bore engines – all emission requirements

Besides focus on power density and fuel economy, Everllence is committed to a steady reduction of the environmental impact of our engines.

IMO Tier II

Applying well-proven methods to achieve a cleaner and more efficient combustion process, Everllence has significantly decreased NO_X emissions. Our four-stroke engines are IMO Tier II compliant with internal engine measures alone.

IMO Tier III

For operation in emission control areas (ECA), Everllence has developed a comprehensive range of selective catalytic reduction (SCR) systems that tremendously reduce NO_X levels surpassing IMO Tier III requirements.

Everllence is the first manufacturer to successfully produce and offer IMO Tier III compliant four-stroke marine engines based on a fully modular SCR kit covering our entire four-stroke engine portfolio. In 2014, Everllence was awarded the first IMO Tier III EIAPP certificate together with the classification society DNV-GL.

Everllence' standard SCR system is available in fourteen different sizes covering our entire portfolio of four-stroke engines. Customised SCR systems are offered on demand.

Everllence has developed a complete range of SCR systems that work perfectly with our engines for maximum system efficiency. The intelligent exhaust gas temperature control allows significant savings in fuel consumptions as compared to third-party supplier systems. Everllence SCR systems work with

2025-10-10 - en

MGO, MDO and HFO with up to 3.5% sulphur. Our modular system comes in 14 different sizes to match all power demands. Some notable benefits of standardisation are significant cost reduction and simplification of installation.

NOTICE Stated SFOC/SGC values are valid for currently applicable rules acc. IMO MARPOL ANNEX VI/NTC 2008, 2023 Edition. They are subject to change regarding the upcoming IMO MARPOL ANNEX VI/NTC rules as proposed in IMO PPR 11/8, to be approved at MEPC 82 (September 2024).

All data provided in this document is non-binding and serves informational purposes only. Depending on the subsequent specific individual projects, the relevant data may be subject to changes and will be assessed and determined individually for each project. This will depend on the particular characteristics of each individual project, especially specific site and operational conditions.

2025-10-10 - en

Code numbers

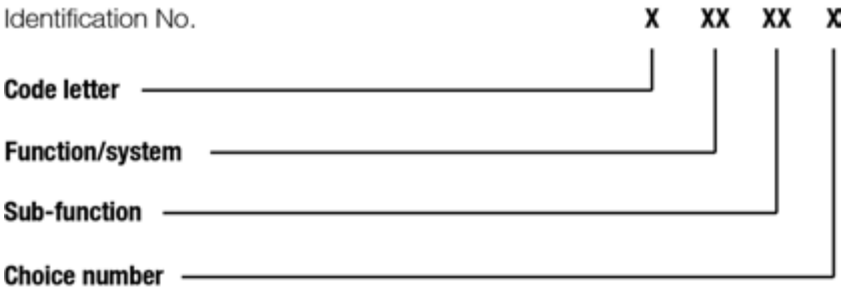

Code letter: The code letter indicates the contents of the documents:

B	:	Basic Diesel engine / built-on engine
D	:	Designation of plant
E	:	Extra parts per engine
G	:	Generator
I	:	Introduction
P	:	Extra parts per plant

Function/system number: A distinction is made between the various chapters and systems, e.g.: Fuel oil system, monitoring equipment, foundation, test running, etc.

Sub-function: This figure occurs in variants from 0-99.

Choice number: This figure occurs in variants from 0-9:

0	:	General information	1	:	Standard
2-8	:	Standard optional	9	:	Optional

Further, there is a table of contents for each chapter and the pages follow immediately afterwards.

Drawing No: Each document has a drawing number including revision number i.e. 1643483-5.5.

Release date: The release date of the document Year.Month.Date. This is the date the document has been created.

NOTICE

When referring to a document, please state both Drawing No including revision No and Release date.

Copyright 2011 © Everllence, branch of Everllence SE, Germany, registered with the Danish Commerce and Companies Agency under CVR Nr.: 31611792, (herein referred to as “Everllence”).

This document is the product and property of Everllence and is protected by applicable copyright laws. Subject to modification in the interest of technical progress. Reproduction permitted provided source is given.

2025-10-10 - en

This page is intentionally left blank

2025-10-10 - en

Safety precautions

General

Correct operation and maintenance, which is the aim of this book, are crucial points for obtaining optimum safety in the operation of the engine. The general measures mentioned here should therefore be routine practice for all operators.

The basic safety instructions are addressed to all users. They inform users about the risks not described elsewhere in the instruction book. They contain important information on how the affected users must protect themselves from such risks. The basic safety instructions provide information on the safety concept and the minimum requirements for the safety use of the Everllence products.

General maintenance guidelines

- Read and follow all instructions given in work cards.
- Only use original spare parts.
- Only use appropriate tools.
- Always inspect the engine when maintenance work is completed.

Cross-referencing in the manual

Many places in the instruction manual contain cross-referencing between work cards and procedures, for example "See work card X".

When switching to the work card being referenced, always check and follow the safety precautions listed for the work card being referenced.

A work procedure must never be carried out unless all safety precautions have been read and understood.

Operational Staff

Operation and maintenance of Everllence engines is to be carried out exclusively by qualified professional personnel.

Stays in the engine area is to be limited to only necessary operations.

2025-09-24 - en

Minimum personal safety equipment requirements:

1. Safety shoes.
2. Hearing protection.
3. Boiler suit or other similar protective wear.
4. Always check data sheets and work cards if additional personal protection is needed for specific work procedures.

Additional personal safety equipment:

1. Use eye protection when working on or near pressurised equipment.
2. Use gloves when working on hot surfaces, or when handling parts with sharp edges.
3. Use helmet if lifting a load more than 2 metres above staff, or if there is overhead obstacles.
4. Use harness when working at heights over 2 metres, or if footing is unstable or unsafe.

Signs / Nameplates

Signs and nameplates mounted on the engine are not to be removed, painted over, or in any other way be made unreadable. This includes safety signs, signs with serial numbers, signs with instructions, etc

Special Dangers

Various situations may lead to risk of serious injury. The following recommendations must always be observed:

2025-09-24 - en

- Keep clear of the space below a crane with load.
- Before opening of valves, always observe which way liquids, gases or flames will move, and keep clear.
- Dismantling of parts may cause the release of springs.
- Removal of plugs may cause the release of pressurised fluids or gasses.
- Blow-off from safety valves will discharge hot liquids, gasses and flash flame, observe which way liquids, gases or flames will spray, and keep clear.
- Do not stand near turbo chargers in case of any abnormal running.
- Do not stand near crankcase doors or relief valves – nor in corridors near doors to the engine space – if an alarm sets off for oil mist, high lube oil temperature, no piston cooling oil flow, or scavenge box fire.
- Do not step on valves, valve handles or instrumentation during maintenance work.
- Lock and tag valves which are closed during maintenance work.

⚠ WARNING It is of the upmost importance that the shutdown function is working properly. Therefore, the shutdown function must be tested at regular intervals according to the planned maintenance programme in the Instruction Manual.

Fire

⚠ WARNING

Fire hazard

Risk of fire due to discharge from relief valves.

- Keep the areas around the relief valves free of oil, grease, and so forth, to prevent the risk of fire caused by the emitted hot air/gas if the relief valves open.

Do not weld or use naked lights in the engine room until it has been ascertained that no explosive gases, vapour, or liquids are present.

If the crankcase is opened before the engine has cooled down, welding and the use of naked flames will result in the risk of explosions and fire. The same applies to inspection of oil tanks and of the spaces below the floor.

Attention is furthermore drawn to the danger of fire when using paint and solvents with a low flash point. Porous insulating material, soaked with oil from leakage, is flammable and should be renewed.

Warning and information signs, symbols

Warning and information signs and safety-relevant symbols provide following information:

- Indications of possible hazards (e.g. pressure, explosion, etc.)
- Warnings and prohibitions against unsafe behavior
- Mandatories for safety-related behavior
- Fire protection and firefighting,
- Signposting of evacuation and emergency escape routes

2025-09-24 - en

Warning and information signs as well as safety-relevant symbols can also be attached directly to components. They must be complete and easy to read or identify at all times.

Section warning messages

Section warning messages instructions apply to an entire chapter, a section or several paragraphs in a document and are prepended to the descriptive text.

Definition of signal words for personal injury

⚠ DANGER

Designation of a danger with a high risk level,
which – if not avoided – will result in death or serious injury.

⚠ WARNING

Designation of a danger with a medium risk level,
which – if not avoided – can result in death or serious injury.

⚠ CAUTION

Designation of a danger with a low risk level,
which – if not avoided – may result in minor or moderate injury.

Note of environmental or property damage

NOTICE

Description of an action or situation,
which – if not avoided – can result in damage to the environment or property.

Special user note

Special user note
User notes contain helpful tips and additional information.
User notes are not used to designation of a danger.

Safety precautions for maintenance

Before carrying out maintenance work, stop and block the engine according to the safety precautions given on the specific work card.
Other safety precautions than listed below may apply.

•	Shut-off starting air
•	Stop lub. oil circulation

2025-09-24 - en

●	Shut-off cooling oil
●	Engine stopped
●	Shut-off cooling water
●	Shut-off fuel oil
●	Press Blocking - Reset

Safety precautions at running engine

●	Stay clear of any rotating parts
●	Do not work on any pressurized systems

Safety precautions for overhauling of components in work shop

●	No engine related safety precautions

Data Sheet Signs

Data sheets may include warning signs for special dangers that could arise in connection with the maintenance procedures.

Warning signs		Mandatory action signs	
General warning sign		General mandatory action sign	
Explosive material		Wear ear protection	
Drop (fall)		Wear eye protec-tion	
Slippery surface		Wear safety foot-wear	
Electricity		Wear protective gloves	
Overhead load		Wear face shield	
Hot surface		Wear head protec-tion	
Crushing		Wear mask	

2025-09-24 - en

Warning signs		Mandatory action signs	
Overhead obstacle		Wear respiratory protection	
Flammable		Wear safety harness	
Crushing of hands		Disconnect before carrying out maintenance	
Pressurised cylinder		Wear antistatic footwear	
Pressurised device		Use gas detector	
Falling objects		No open flame, Fire, open ignition source and smoking prohibited	
Low temperature/ freezing			

Alarm messages

All alarm messages must be responded and acted upon accordingly.

- Serious alarms can lead to automatic power reduction and a complete shutdown.
- In the case of alarm messages, an error check and troubleshooting must be carried out immediately.
- The operating and maintenance personnel must know the alarm system and be able to adequately respond to the alarm messages.

Cleanliness

- All areas should be always clean and tidy.
- Remove oil spills immediately with suitable cleaning agents.
- Dispose of oil-soiled or contaminated cleaning agents properly.
- In case of danger of dust or dirt entries stop the ventilation system. If necessary, close the ventilation ducts, windows and skylights.
- Ensure that no dirt enters the product during maintenance.
- All work that can cause contamination or entry of metal chips or grinding dust must not be carried out close to the product.
- Clean the product regularly to detect possible leaks quickly and easily.

Compressed air for maintenance work

Compressed air for maintenance work is dangerous due to its high pressure. Improper use can lead to serious personal injury.

2025-09-24 - en

- Use suitable personal protective equipment.
- In particular, protect eyes, ears and open areas of skin.
- Do not blow compressed air in the direction of people.
- Do not use compressed air to clean any worn clothing.

Danger of injury due to manual engine turning

Before engaging the turning gear, ensure that the starting air supply is shut off, the main starting and slow turning valves are blocked, and that the indicator cocks are open.

When the turning gear is engaged, check that the indicator lamp “Turning gear in” has switched on.

The turning gear remote control is a critical device and should always be kept in optimal working condition. Any fault on the device or cable must be rectified before use.

When operating the turning gear it is important to note the following points:

- The turning gear must be operated by the remote control and only by the person working on the engine.
- Warnings must be given before each turning.
- Operation of the turning gear from the switchboard must not take place while maintenance work is in progress inside the engine.
- Block the turning gear remote control or place a “Do not touch” sign.

External Equipment

Observe the safety instructions, operating and work manuals of external equipment.

Work on electrical installations

- Disconnect power supply.
- Secure re-connection by “Lockout and Tagout”.
- Check that there is no operating voltage.
- Ensure protection from nearby live parts.
- Potential-free signal must be used when external signals are connected to Everllence control system.
- Enclosures may contain more than one power supply.
  In this case, label the enclosure with "Warning - more than one power supply".
- All terminals/cables must be labeled according to the wiring diagram.

ATEX installations

After completion of ATEX installation, an initial inspection of the material and installation must be carried out according to EN 60079-14 and EN 60079-17.

Handling electrical wiring and cables

- Route all wiring and cables that is at risk of elevated temperatures so that they are protected against external excessive heat.
- The minimum distance between control lines and power supply cables (up to 690 V AC) is 150 mm.

2025-09-24 - en

- The minimum distance between low-voltage and medium-voltage power lines is 300 mm.
- Special requirements such as necessary shielding must always be observed. Any such instructions specified in the drawings are binding.
- See the cable manufacturer's specifications for the minimum bending radius of the cables.
- Cables of intrinsically safe circuits (for EX zones) should always be laid in their own cable duct and must not be laid together with signal and power cables. Maintain minimum distance. The shell colour is light blue.

Handling hoses and pipes

Hoses and pipes pose hazards due to the media they are used to transport:

- Flammable liquids or gaseous media
- Hot liquid or gaseous media
- Liquid or gaseous media under high pressure

Liquid or gaseous media escaping in an uncontrolled manner may cause serious injuries. Liquid media and vapours may be very hot, which can cause serious burns if they escape. Leaking gaseous media may cool very rapidly, which may cause frostbite.

Improper handling may result in explosions, fire or serious injury (burns, skin and eye injuries due to liquid or gaseous media escaping suddenly under high pressure).

Always observe the following safety precautions when handling hoses and pipes:

- Observe the maintenance schedule, particularly the specified replacement intervals.
- All lines, hoses and bolted connections must be regularly checked for leakages and externally visible damage. Repair any damage immediately. Avoid chafing and repair if necessary.
- Before opening or dismantling any piping, cylinders, tanks, valves or connections, make sure that the system is depressurised or drained.
- Ensure that all piping, cylinders, tanks, valves and connections are suitable for the intended media, temperature and pressure ranges.
- Allow pipes carrying hot liquids or gases to cool down before opening.
- Replace insulating material contaminated with flammable liquids immediately.
- Install all flexible hose connections so that they are free of torsional forces.

Handling of flammable materials

To prevent dangers related to handling of flammable materials, the following measures must be taken:

- A high air exchange rate reduces the risk of fires.
- For conventional applications, the volume of air in an enclosed space shall be completely replaced at least five times per hour.
- For applications with highly flammable materials such as gas, oxygen, etc., the air volume shall be completely replaced at least twelve times per hour.
- In the case of highly flammable gaseous materials, ensure that the pipework is permanently technically sealed. Take organisational measures to ensure that no leaks occur.

2025-09-24 - en

- Ensure that no naked flames are generated and that smoking is prohibited.
- If open flames cannot be avoided, e.g. during welding work, make sure that no flammable substances or atmospheres are present in the working environment.
- Pipes for hot and flammable liquids (e.g. lube oil) shall be routed at an appropriate distance from heat-sensitive materials.
- Close hot open surfaces with thermally insulating covers to prevent ignition of dripping media.

Hazardous materials

All risks must be identified in a risk assessment. Safety measures must be implemented in relation to the activity and in consideration of the safety data sheets before work begins.

- Always follow the manufacturer's specific instructions, i.e. the material safety data sheet (MSDS)
- Use protective gloves, goggles, breathing mask, and any other recommended protective gear stated in the material safety data sheet
- Read the material safety data sheet regarding first aid measures in the event of skin contact
- When handling harmful materials it is important to ensure proper ventilation and shielding if needed
- In the event of leaks or spillage, spread binding agents immediately. Dispose of the binding agents according to the material safety data sheet

Hot and cold surfaces

During operation, high surface temperatures can occur, which can cause burns if touched. Individual components and piping systems may contain gases or volatile liquids. Due to the expansion of gases or evaporation of liquids they can become very cold.

- Wear suitable personal protective equipment.
- Avoid direct contact with hot and cold surfaces.

Hot works

Hot work permit is mandatory for all hot works. In particular, hot works on tanks or piping systems with potential explosive material can lead to an explosion. Before any hot work on tanks or piping systems, it must be determined by a qualified specialist (for example an engineer or service technician) that these tanks or piping systems do not contain any explosive material.

Freezing

If there is a risk of damage due to freezing when the plant is out of service, engines, pumps, coolers, and pipe systems should be emptied of cooling water.

Safety valve

Beware of unexpected opening of safety valves and its exhaust opening in top of the cylinder top cover as hot liquids, gasses and flash flame will be discharged.

2025-09-24 - en

Risk of explosion in the cylinder crankcase

By mechanical atomization and subsequent evaporation of the lubricating oil on hot components or by the entry of unburned gases during operation, it may lead to the formation of explosive atmosphere in the cylinder crankcase.

- Danger area around the engine must be clearly marked and recognizable.
- During operation, the operating and maintenance personnel may only be in the vicinity of the engine for the duration of the necessary work.
- The opening of the cylinder crankcase cover is generally prohibited during operation.
- Work on the engine may be performed 20 minutes after engine stop.
- Surveillance sensors must be replaced as soon as possible after a failure or damage.
- Check the oil mist detectors according to the operating instructions.

Explosion relief valve

If there is an event of an oil mist- or gas explosion in the engine, the explosion relief valves protect personnel and equipment. The explosion relief valve opens immediately to protect the engine of damage. It is designed to relieve the excess pressure during an explosion, avoid flame escape and to close rapidly after an explosion.

- The area around the explosion relief valves must always be clear.
- Danger of burns due to hot parts! Do not touch the relief valve after an explosion.
- Work on the explosion relief valve must only be carried out with the shutdown and cooled down engine. Note the cooling time for the engine and components.
- The security seal on the explosion relief valve must not be removed.
- Disassembling the flame arrester is forbidden.
- While working on the explosion relief valve, appropriate protective clothing and gloves must be used.
- Damaged explosion relief valve must be replaced.
- After an explosion: A restart of the engine is only permissible if the cause of the fault has been determined and eliminated. The explosion relief valves must be checked for proper function and replaced if necessary.

Hazard zone around relief

Relief valves are installed on the crankcase covers and exhaust pipes and are designed to protect persons and equipment in case of an oil mist or gas explosion.

During engine operation, the presence of personnel in the hazard zones around the relief valves is prohibited.

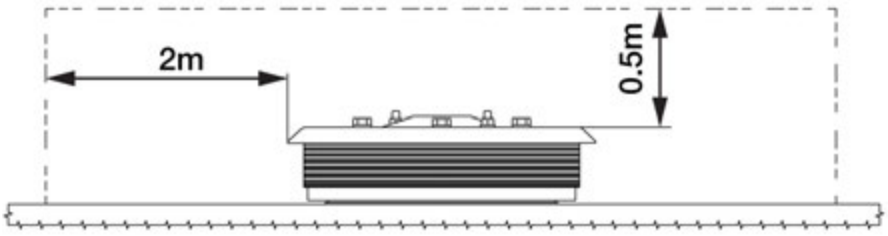

Figure 1: Hazard zone around a relief valve

2025-09-24 - en

Fuel nozzle testing

The removal of fuel valves (or other valves in the cylinder head) may cause oil to run down to the piston crown; if the piston is hot, an explosion may then blow out the valve. When testing fuel valves with the hand pump, do not touch the spray holes, as the jet may pierce the skin.

⚠ DANGER

Impacting second fuel components during lift

Risk of second fuel leakage

- Due to the risk of damaging second fuel components on the engine during lifts, the engine room crane should not be used during second fuel operation.
  - ⇨ Movement of, and lift of heavy equipment around and above the engine, is only to be done with the engine stopped or operating in fuel oil, ensuring the engine is in second fuel standby or purged of second fuel before beginning lift.

Lifting tools and load handling equipment

The use of lifting tools and load handling equipment may only be carried out by trained operating personnel.

- Depending on the load and situation, suitable lifting tools and load handling equipment and attachments should be selected.
- Before using cranes, check the functionality, i.e. slow and fast movement/ lifting and end stop functionality. In case of double jib cranes also check that the two cranes lift at the same speed.
- Before each use, lifting tools and load handling equipment must be checked for damage.
- Do not use lifting tools and load handling equipment that are not clearly identified, that are damaged, that are not marked with the Work Load Limit (WLL).
- All operations such as striking, lifting, moving, landing and separating of lifting tools and load handling equipment must be carefully considered and carried out with due care.
- Before lifting a load, the weight and center of gravity must be uniquely determined.
- Always use all intended and available lifting points when lifting loads.
- For loads without existing anchor points, the anchor points must be determined.
- Secure loads against slipping by fixing with suitable means.
- To avoid damaging load handling equipment use edge protectors for sharp edges.

Pay attention to reducing the maximum load capacity

0° – 30° = 50 % load per sling leg	30° – 60° = 75 % load per sling leg	90° – 120° = 100 % load per sling leg	above 120° prohibited

2025-09-24 - en

Reduction of the load capacity by the sling angle

At the synthetic web slings pay attention to the maximum load!

2025-09-24 - en

WLL of sewn webbing component	Colour of sewn webbing component	Working load limits (WLL) in tonnes								
		Straight lift	Choked lift	Basket hitch			Two leg sling		Three and four leg slings	
							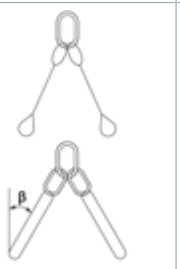		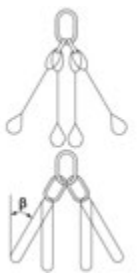	
				Parallel	β = 0 - 45°	β = 45 - 60°	β = 0 - 45°	β = 45 - 60°	β = 0 - 45°	β = 45 - 60°
		M = 1,0	M = 0,8	M = 2,0	M = 1,4	M = 1,0	M = 1,4	M = 1,0	M = 2,1	M = 1,5
1,0	Violet	1,0	0,8	2,0	1,4	1,0	1,4	1,0	2,1	1,5
2,0	Green	2,0	1,6	4,0	2,8	2,0	2,8	2,0	4,2	3,0
3,0	Yellow	3,0	2,4	6,0	4,2	3,0	4,2	3,0	6,3	4,5
4,0	Grey	4,0	3,2	8,0	5,6	4,0	5,6	4,0	8,4	6,0
5,0	Red	5,0	4,0	10,0	7,0	5,0	7,0	5,0	10,5	7,5
6,0	Brown	6,0	4,8	12,0	8,4	6,0	8,4	6,0	12,6	9,0
8,0	Blue	8,0	6,4	16,0	11,2	8,0	11,2	8,0	16,8	12,0
10,0	Orange	10,0	8,0	20,0	14,0	10,0	14,0	10,0	21,0	15,0
Over 10.0	Orange									
M = Mode factor for symmetrical loading. Handling tolerance for slings or parts of slings indicated as vertical = 6°										

Shackles

Screw pins to be tightened to full contact.

Eye screw / Eye nut

Tighten to full contact without any gap. Be aware of loading direction.

Lateral loading is prohibited in all cases!

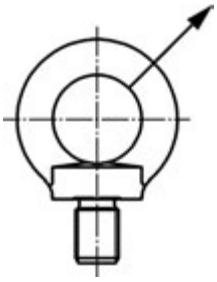

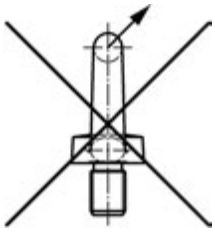

Prohibited lateral load

Load capacity depending on the load direction

2025-09-24 - en

Installation position to thread axis:	vertical			horizontal
Direction of loading:	axial	obliquely		laterally
		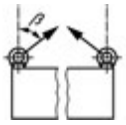	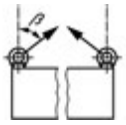	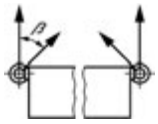
Opening angle:	0°	β ≤ 45°	β > 45°– 60°	β ≤ 45°
Load capacity in %:	100 %	75 %	50 %	

Hooks

Only hooks with safety latches are allowed for lifting.

Chain tackles

Be aware of lifting angle.

Lighting

Sufficient lighting must be permanently installed in suitable places.

- For poor or unlighted areas, a portable work light must be available.
- For maintenance and repair work only portable safety lamps may be used.

Order at the workplaces

Equipment required for operation, maintenance and servicing must be stored properly after use. For example:

- Hand tools should be securely fastened and placed on easily accessible tool panels.
- Special tools should be securely fastened close to the area of use.
- Components, tools, aids, etc. should not be on the ground, on platforms, on catwalks, when they are no longer needed.

Travelling trolley

Before use, inspect the travelling trolley and ensure that the travelling trolley is properly maintained.

⚠ CAUTION The travelling trolley must only be used for vertical lifts and NOT for tilted lifts.

2025-09-24 - en

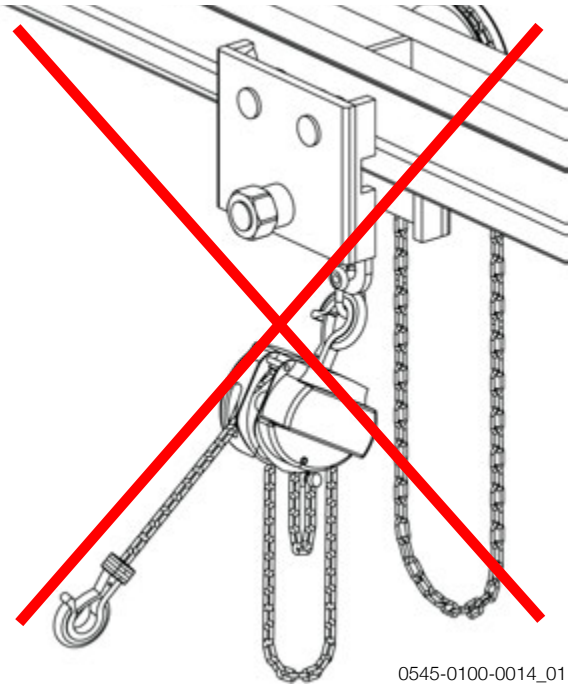

Sealing materials

When removing O-rings, sealing rings, and other rubber or plastic-based sealants exposed to high temperatures, precautions should be taken by using protective neoprene or PVC gloves.

Spare parts

Only use spare parts approved by Everllence.

- Heavy and large spare parts should be stored near the place of use.
- Spare parts must be professionally secured against unintentional movement.
- The safe transport of spare parts must be ensured by means of suitable lifting tools and load handling equipment.
- Spare parts must be protected against harmful influences such as corrosion or mechanical effects.

Splash guard

It is required that fuel oil and lubrication oil lines and flanged connections must be screened or otherwise suitably protected to avoid oil onto hot surfaces, air intakes, electrical installations or other sources of ignition. Splash guard removed in connection with maintenance or repair work must be reinstalled again when the work has been carried out.

Stay under suspended loads prohibited

Improper transport of loads can lead to serious personal injury.

- Never work or stay under a suspended load.
- Use suitable personal protective equipment.
- Use suitable means of transport, lifting tools and load handling equipment and use as intended.
- Always use all intended and available lifting points when lifting loads.

2025-09-24 - en

Tools

All tools supplied by Everllence comply with European standards.

- A completeness check of the tools must be carried out before and after each maintenance and repair work.
- Before each use, it must be ensured that the tool is in a technically safe condition.
- Do not use damaged tools.
- If tools are to be used in areas where specific certificates, special markings or approvals are required, the operator must ensure that the tools meet the requirements.

Marking of piping systems

Marking of piping systems

The following marking of piping systems is a recommendation of Everllence. The final color scheme is to be decided between owner, engine builder and shipyard, as such the following should only be seen as guidelines.

Piping systems containing media that directly or indirectly pose potential hazards to safety are marked by Everllence according to DIN ISO 14726. This marking identifies the medium by certain main colours, a text informs about the medium and its effect. Arrows indicate the flow direction.

Piping systems for fuels with a low flash point are painted in the main colour of flammable gases (yellow) or covered with tape rolls.

System	Medium	Label	Colour name	Colour	RAL	Note
Starting	Non-flammable gases	Starting air 30 bar	Grey		7001	
Exhaust	Waste media [a]	Exhaust gas	Black		9005	
Lube	Oils other than fuels	Lubricant 6 bar	Orange		2003	Apply actual pressure
Hydraulic	Oils other than fuels	Hydraulic oil 30 bar	Orange		2003	Apply actual pressure
Fuel	Fuel	HFO / MDO / MGO / etc.	Brown		8001	
Flammable gases	Low Flashpoint Fuel	Methanol	Yellow		1021	Full painted pipes
Flammable gases	Low Flashpoint Fuel	LPG	Yellow		1021	Full painted pipes
Flammable gases	Low Flashpoint Fuel	Ethan	Yellow		1021	Full painted pipes
Flammable gases	Low Flashpoint Fuel	Methan	Yellow		1021	Full painted pipes

2025-09-24 - en

System	Medium	Label	Colour name	Colour	RAL	Note
Flammable gases	Low Flashpoint Fuel	Ethanol	Yellow		1021	Full painted pipes
EGR	Acids, alkalis	NaOH	Violet		4001	
SCR	Acids, alkalis	Urea	Violet		4001	
Gas system flushing	Non-flammable gases	Nitrogen	Grey		7001	
Sea water	Sea water [b]	Sea water	Green		6018	
Cooling	Fresh water	Fresh water with inhibitor high / low temperature	Blue		5015	
Heating	Steam	Steam	Silver		9006	
Fire fighting	Fire fighting	CO2	Red		3000	
Working air	Non-flammable gases	Working air 10 bar	Grey		7001	Apply actual pres-sure
Control	Non-flammable gases	Control air max. 10 bar	Grey		7001	
Ventilation	Air in ventilation systems	Venting	White		9010	
Waste media	Waste media [a]		Black		9005	

[a] Examples: black water, grey water, waste oil, exhaust gas.
[b] For ships with mixed navigation (sea-river ships): all outside waters..

Table 1: Main colors for media and their label text/remarks

2025-09-24 - en

Placement of warning signs
L16/24, L16/24S

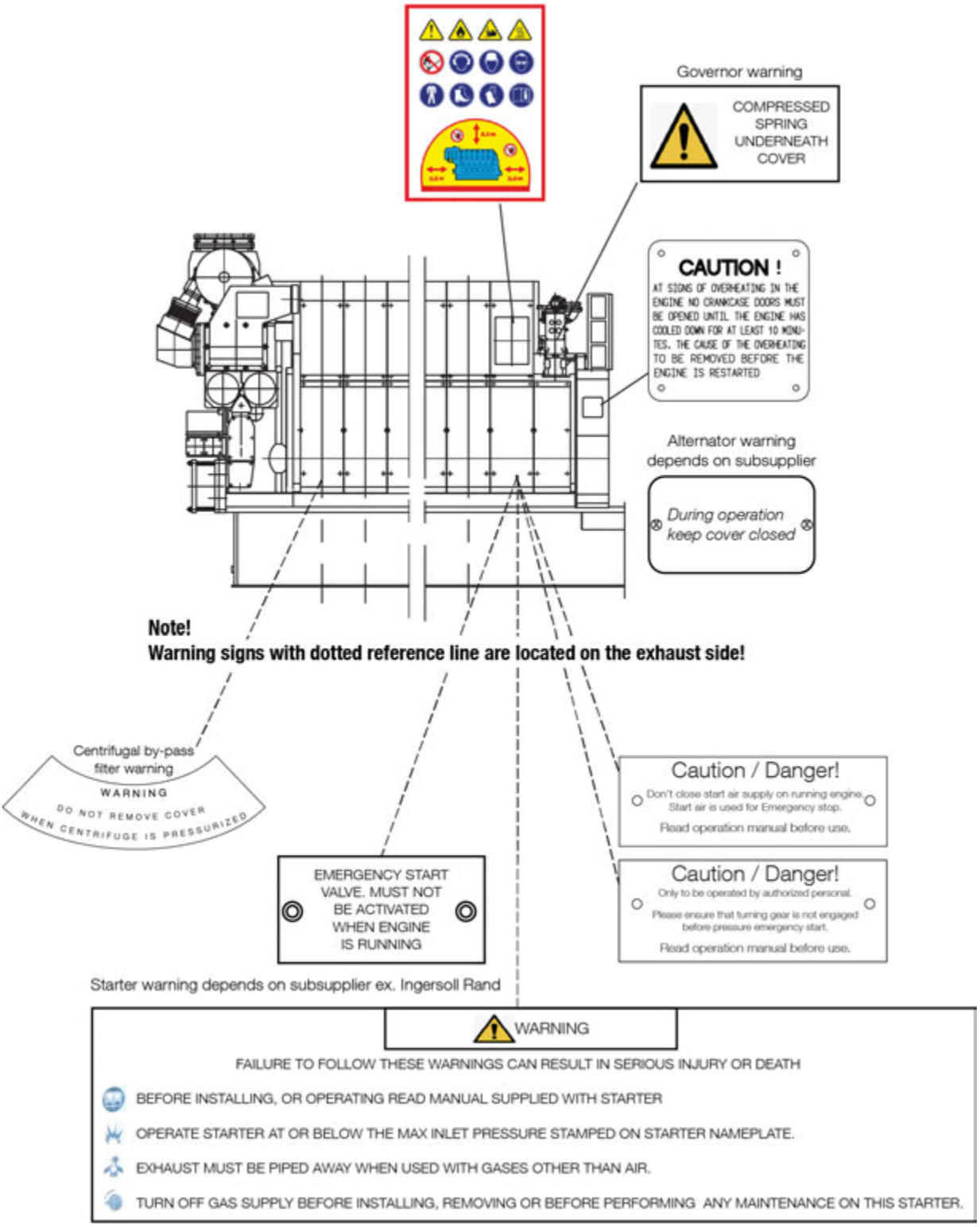

2025-09-24 - en

Placement of warning signs
L21/31, L21/31S, L21/31 Mk2, L21/31 Mk1.1, L21/31DF-M

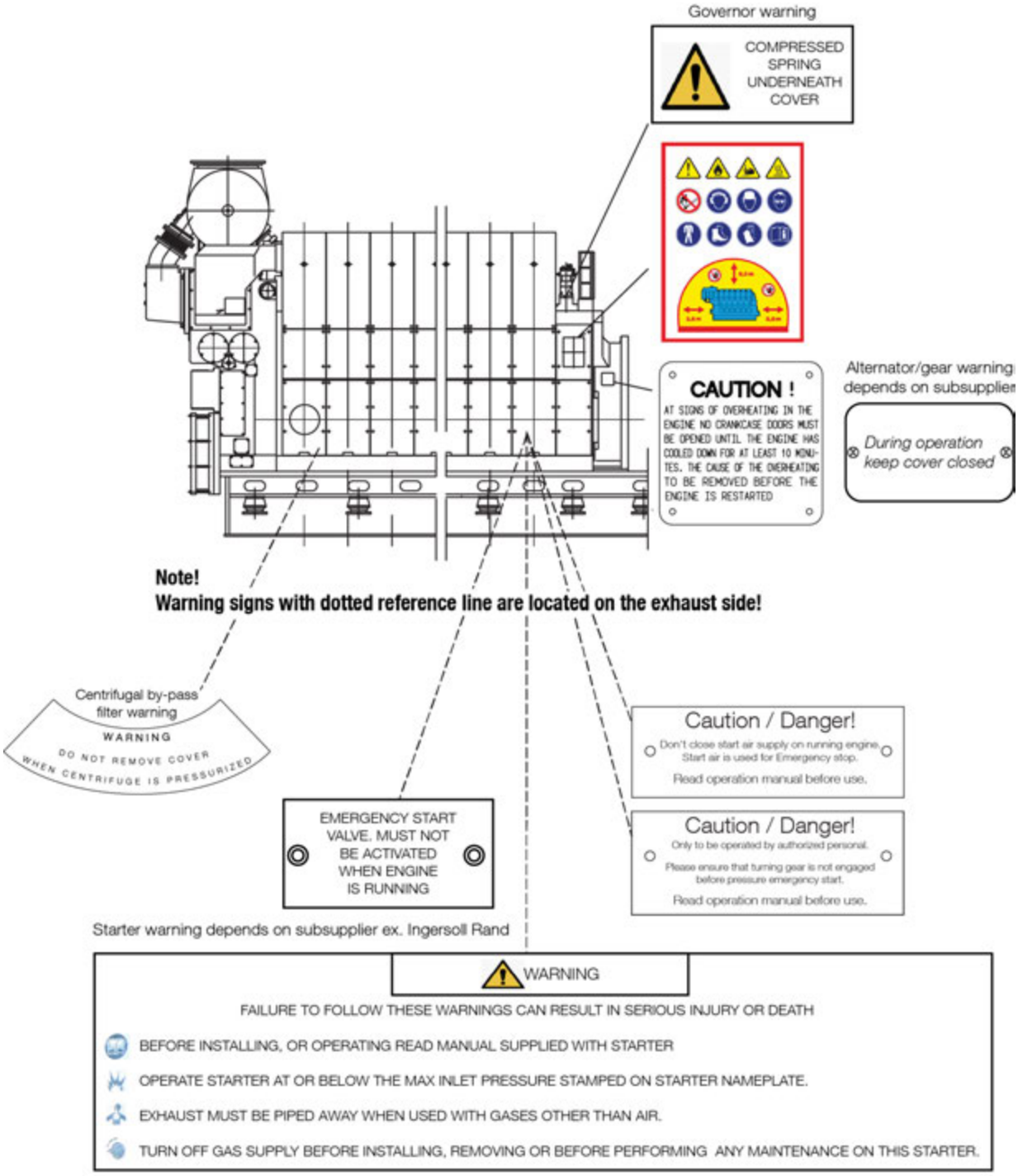

2025-09-24 - en

Placement of warning signs
L27/38, L27/38S, L27/38 Mk2

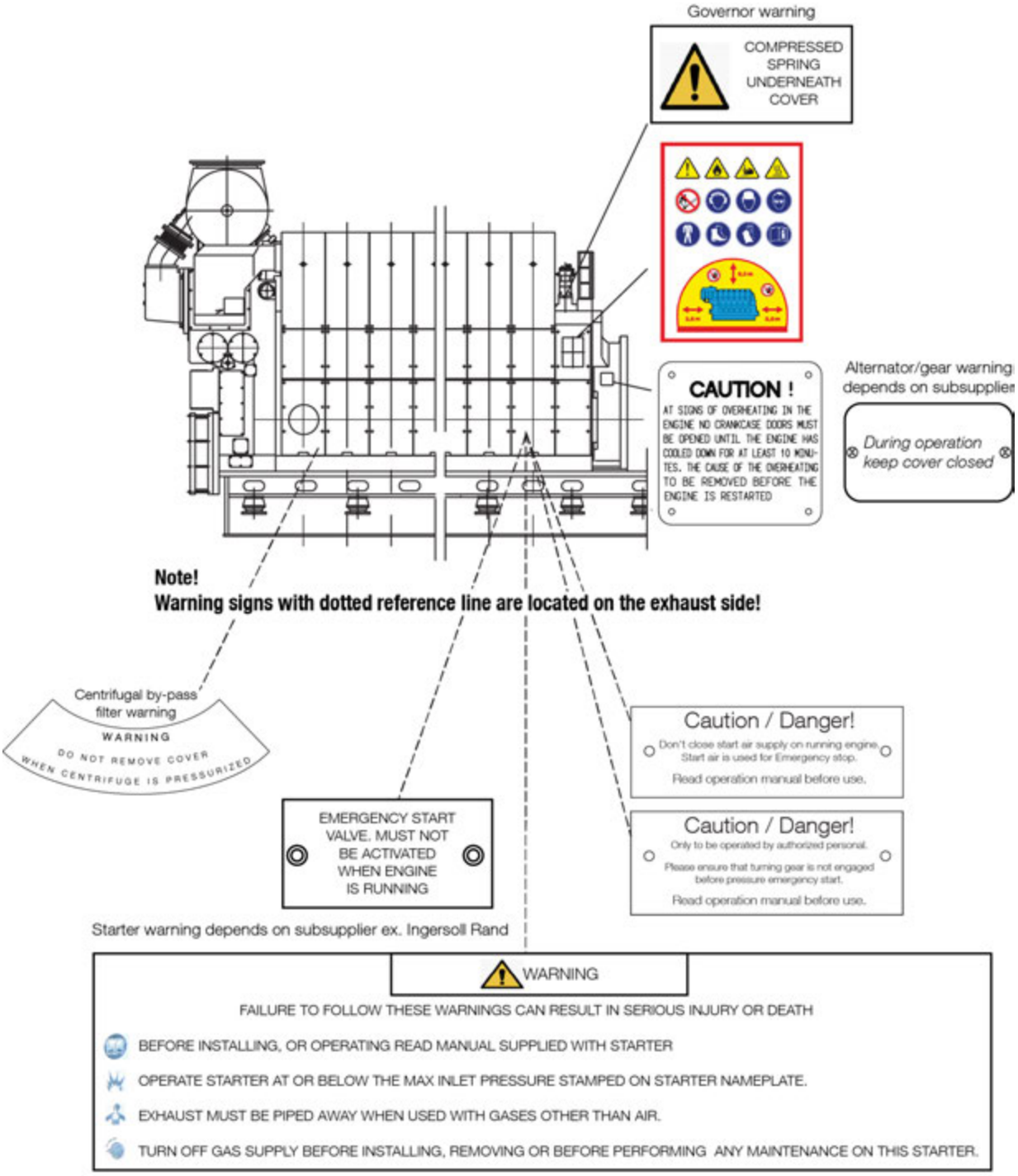

2025-09-24 - en

Placement of warning signs
L23/30A, L23/30H, L23/30H Mk2, L23/30H Mk3, L23/30S, L23/30DF

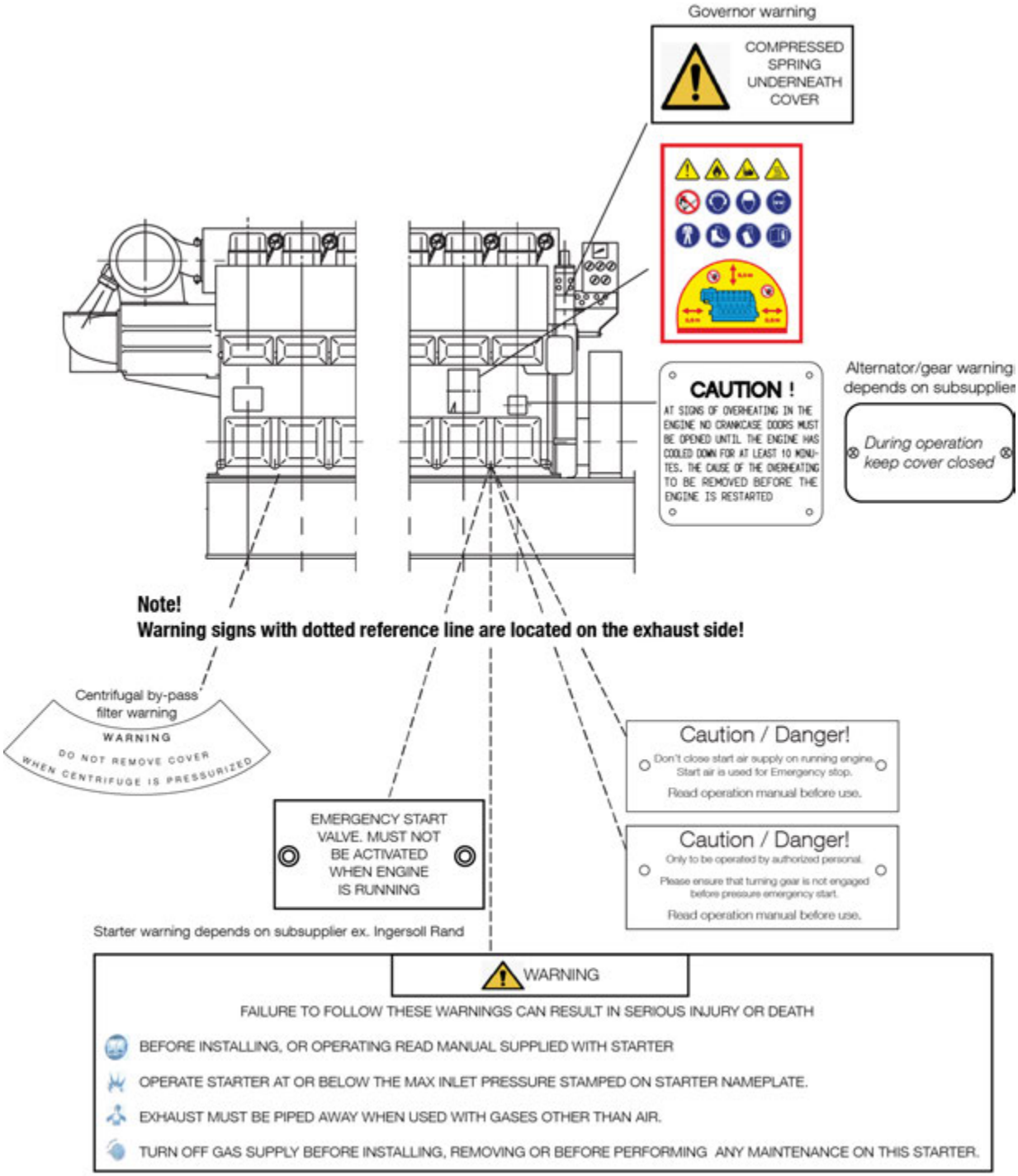

2025-09-24 - en

Placement of warning signs
L28/32A, L28/32H, L28/32S, L28/32DF

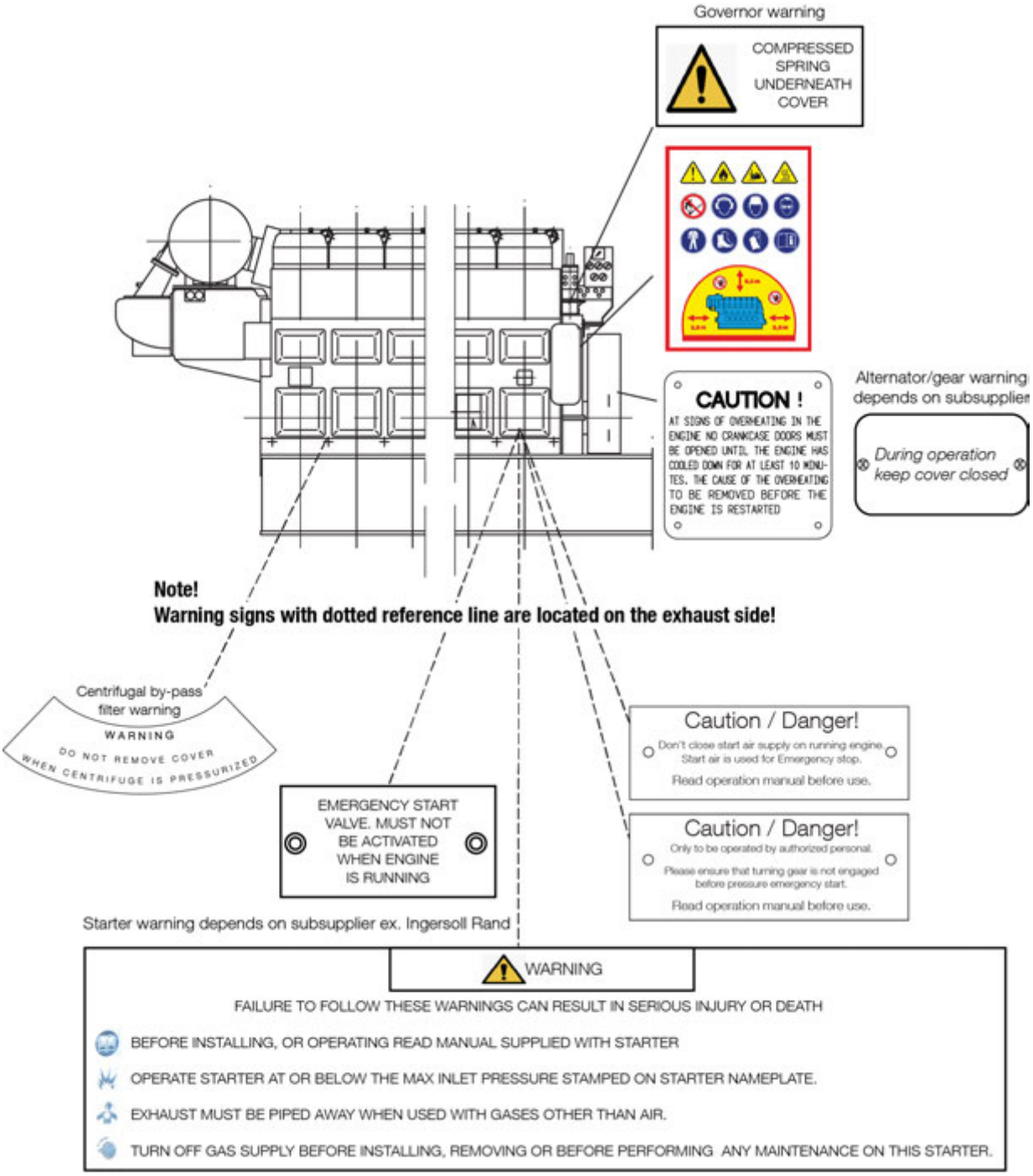

2025-09-24 - en

Placement of warning signs
V28/32S

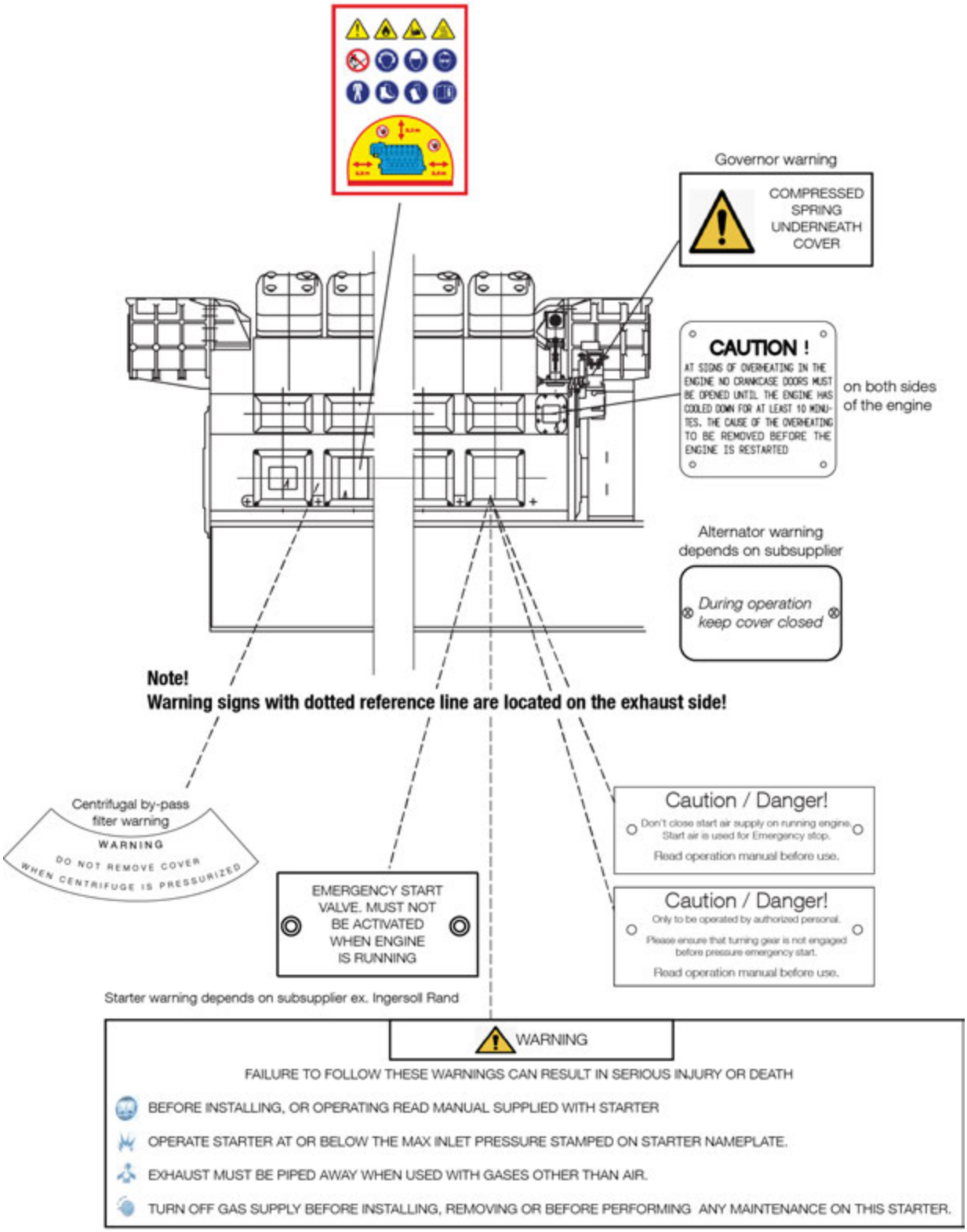

2025-09-24 - en

This page is intentionally left blank

2025-09-24 - en

Marine engine programme

Description

Four-stroke diesel engine programme for marine applications complies with IMO Tier II/III, GenSet application.

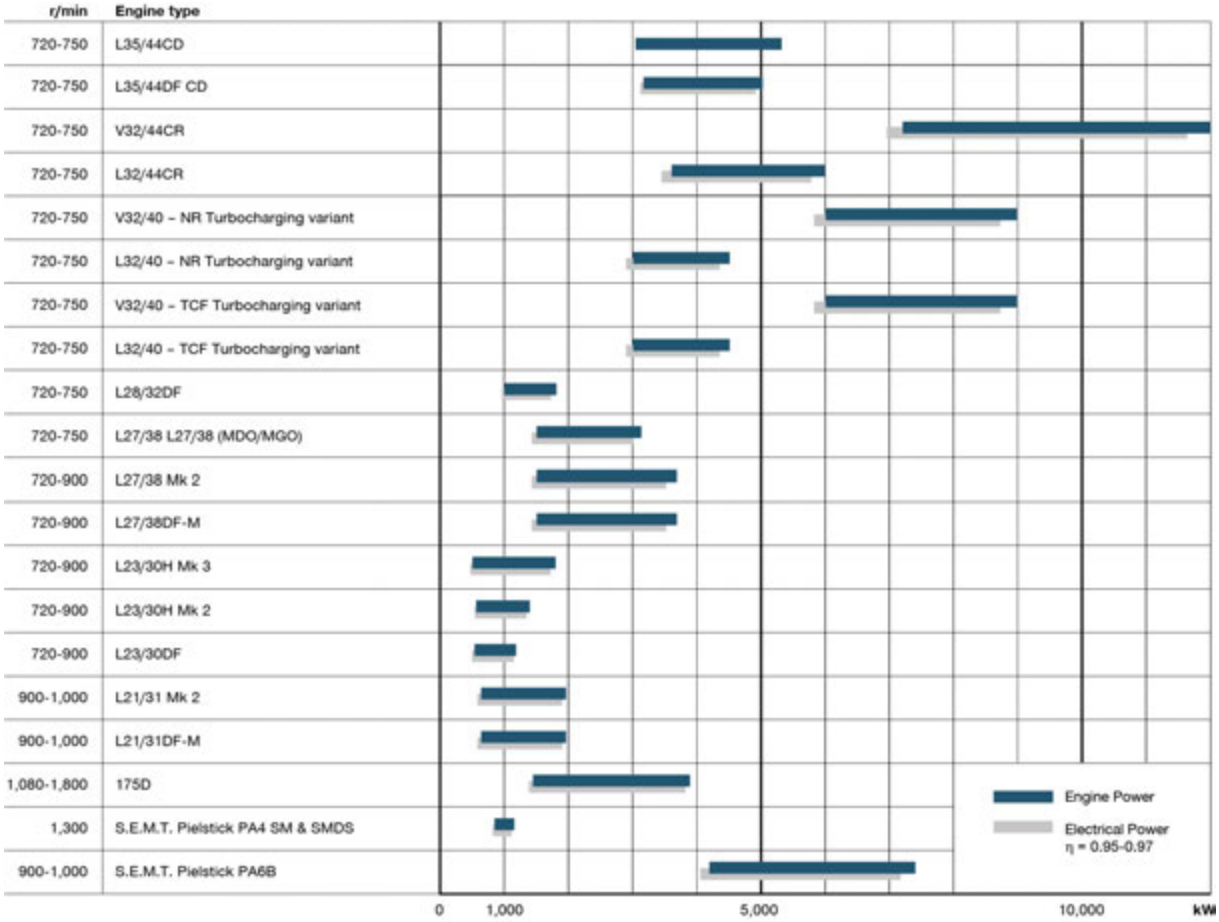

2025-01-29 - en

This page is intentionally left blank

2025-01-29 - en

Key for engine designation

Key for engine designation

The engine types of the Everllence programme are identified by the following figures:

6 L 28/32 H

No. of cylinders

5, 6, 7, 8, 9
12, 16, 18

Engine type

L : In-line
V : V-built

Cyl. diam/stroke

16/24 : 160/240
21/31 : 210/310
23/30 : 225/300
27/38 : 270/380
28/32 : 280/320

Design variant

A - Propulsion
H - GenSet Marine
S - GenSet Power
CR - Common Rail
DF - Dual Fuel
Mk(x) - Design version

2025-08-27 - en

This page is intentionally left blank

2025-08-27 - en

Designation of cylinders

General

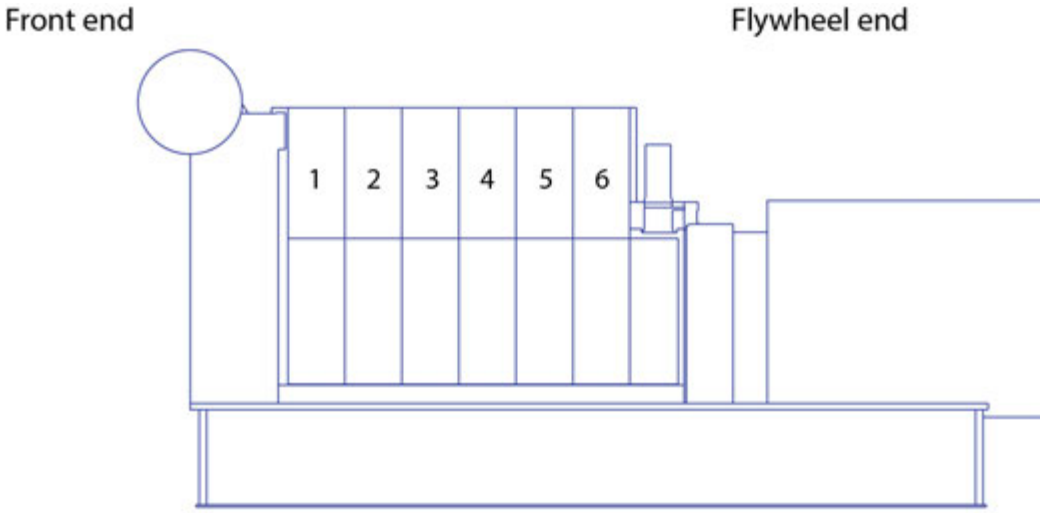

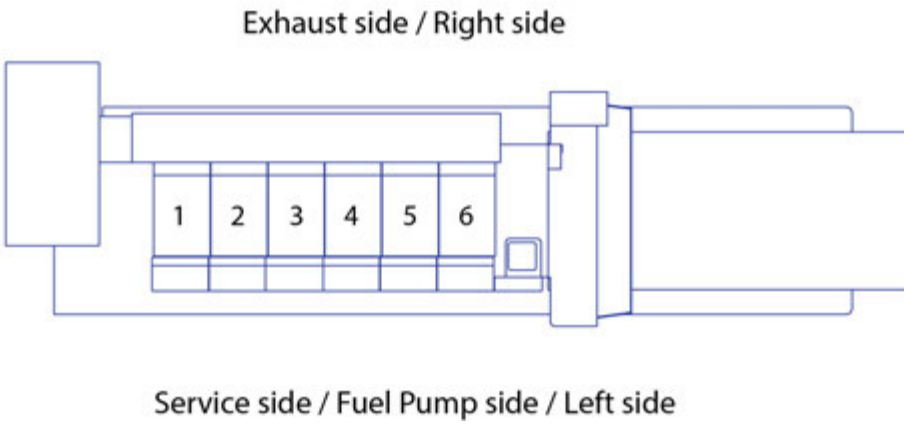

2025-01-29 - en

This page is intentionally left blank

2025-01-29 - en

Code identification for instruments

Explanation of symbols

Temperature Indicator No. 40 *

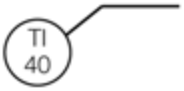

Measuring device
Local reading

Pressure Indicator No. 22 *

Measuring device
Sensor mounted on engine/unit
Reading/identification mounted in a panel on the engine /unit

Temperature Alarm High No. 12 *

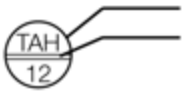

Measuring device
Sensor mounted on engine/unit
Reading/identification outside the engine/unit

Pressure Transmitting No. 22 *

Measuring device
Sensor mounted on engine/unit
Reading/identification in a panel on the engine/unit
and reading outside the engine/unit

* Refer to standard location and text for instruments on the following pages.

Specification of letter code for measuring devices			
1st letter		Following letters	
F	Flow	A	Alarm
L	Level	D	Differential
P	Pressure	E	Element
S	Speed, System	H	High
T	Temperature	I	Indicating
U	Voltage	L	Low
V	Viscosity	S	Switching, Stop
X	Sound	T	Transmitting
Z	Position	X	Failure
		V	Valve, Actuator

2025-01-29 - en

Standard text for instruments

Diesel engine/alternator

LT water system

01	inlet to air cooler	04	inlet to alternator	07	inlet to lub. oil cooler
02	outlet from air cooler	05	outlet from alternator	08	inlet to fresh water cooler
03	outlet from lub. oil cooler	06	outlet from FW cooler (SW)	09	

HT water system

10	inlet to engine	14	inlet to HT air cooler	17	outlet from fresh water cooler
10A	FW inlet to engine	14A	FW inlet to air cooler	18	inlet to fresh water cooler
11	outlet from each cylinder	14B	FW outlet from air cooler	19	preheater
12	outlet from engine	15	outlet from HT system	19A	inlet to prechamber
13	inlet to HT pump	16	outlet from turbocharger	19B	outlet from prechamber

Lubricating oil system

20	inlet to cooler	24	sealing oil - inlet engine	28	level in base frame
21	outlet from cooler/inlet to filter	25	prelubricating	29	main bearings
22	outlet from filter/inlet to engine	26	inlet rocker arms/roller guides		
23	inlet to TC/outlet from TC	27	intermediate bearing/alternator bearing		

Charging air system

30	inlet to cooler	34	charge air conditioning	38	Ambient temperature
31	outlet from cooler	35	surplus air inlet	39	
32	jet assist system	36	inlet to turbocharger		
33	outlet from TC filter/inlet to TC compr.	37	charge air from mixer		

Fuel oil system

40	inlet to engine	44	outlet from sealing oil pump	48	
41	outlet from engine	45	fuel-rack position	49	
42	leakage	46	inlet to prechamber		
43	inlet to filter	47			

Nozzle cooling system

50	inlet to fuel valves	54		58	oil splash
51	outlet from fuel valves	55	valve timing	59	alternator load
52		56	injection timing		
53		57	earth/diff. protection		

Exhaust gas system

60	outlet from cylinder	64		68	
61	outlet from turbocharger	65		69	
62	inlet to turbocharger	66			
63	combustion chamber	67			

2025-01-29 - en

Compressed air system

70	inlet to engine	74	inlet to reduction valve	78	inlet to sealing oil system
71	inlet to stop cylinder	75	microswitch for turning gear	79	
72	inlet to balance arm unit	76	inlet to turning gear		
73	control air	77	waste gate pressure		

Load speed

80	overspeed air	84	engine stop	88	index - fuel injection pump
81	overspeed	85	microswitch for overload	89	turbocharger speed
82	emergency stop	86	shutdown	90	engine speed
83	engine start	87	ready to start		

Miscellaneous

91	natural gas - inlet to engine	95	voltage	99	common alarm
92	oil mist detector	96	switch for operating location	100	inlet to MDO cooler
93	knocking sensor	97	remote	101	outlet to MDO cooler
94	cylinder lubricating	98	alternator winding	102	alternator cooling air

2025-01-29 - en

This page is intentionally left blank

2025-01-29 - en

Symbols for piping

General

No	Symbol	Symbol designation	No	Symbol	Symbol designation
1. GENERAL CONVENTIONAL SYMBOLS			2.13		Blank flange
1.1		Pipe	2.14		Spectacle flange
1.2		Pipe with indication of direction flow	2.15		Orifice
1.3		Valves, gate valves, cocks and flaps	2.16		Orifice
1.4		Appliances	2.17		Loop expansion joint
1.5		Indicating and measuring instru-ments	2.18		Snap coupling
1.6		High-pressure pipe	2.19		Pneumatic flow or exhaust to at-mosphere
1.7		Tracing	3. VALVES, GATE VALVES, COCKS AND FLAPS		
1.8		Enclosure for several components as-sembled in one unit	3.1		Valve, straight through
2. PIPES AND PIPE JOINTS			3.2		Valve, angle
2.1		Crossing pipes, not connected	3.3		Valve, three-way
2.2		Crossing pipes, connected	3.4		Non-return valve (flap), straight
2.3		Tee pipe	3.5		Non-return valve (flap), angle
2.4		Flexible pipe	3.6		Non-return valve (flap), straight screw down
2.5		Expansion pipe (corrugated) gen-eral	3.7		Non-return valve (flap), angle, screw down
2.6		Joint, screwed	3.8		Safety valve
2.7		Joint, flanged	3.9		Angle safety valve
2.8		Joint, sleeve	3.10		Self-closing valve
2.9		Joint, quick-releasing	3.11		Quick-opening valve
2.10		Expansion joint with gland	3.12		Quick-closing valve
2.11		Expansion pipe	3.13		Regulating valve

2025-01-29 - en

2.12		Cap nut	3.14		Ball valve (cock)

2025-01-29 - en

No	Symbol	Symbol designation	No	Symbol	Symbol designation
3.15		Butterfly valve	3.37		3/2 spring return valve contr. by solenoid
3.16		Gate valve	3.38		Reducing valve (adjustable)
3.17		Double-seated changeover valve	3.39		On/off valve controlled by solenoid and pilot directional valve and with spring return
3.18		Suction valve chest	4. CONTROL AND REGULATION PARTS		
3.19		Suction valve chest with non-return valves	4.1		Fan-operated
3.20		Double-seated changeover valve, straight	4.2		Remote control
3.21		Double-seated changeover valve, angle	4.3		Spring
3.22		Cock, straight through	4.4		Mass
3.23		Cock, angle	4.5		Float
3.24		Cock, three-way, L-port in plug	4.6		Piston
3.25		Cock, three-way, T-port in plug	4.7		Membrane
3.26		Cock, four-way, straight through in plug	4.8		Electric motor
3.27		Cock with bottom connection	4.9		Electromagnetic
3.28		Cock, straight through, with bottom conn.	4.10		Manual (at pneumatic valves)
3.29		Cock, angle, with bottom connection	4.11		Push button
3.30		Cock, three-way, with bottom connection	4.12		Spring
3.31		Thermostatic valve	4.13		Solenoid
3.32		Valve with test flange	4.14		Solenoid and pilot directional valve
3.33		3-way valve with remote control (actuator)	4.15		By plunger or tracer
3.34		Non-return valve (air)	5. APPLIANCES		
3.35		3/2 spring return valve, normally closed	5.1		Mudbox
3.36		2/2 spring return valve, normally closed	5.2		Filter or strainer

2025-01-29 - en

No	Symbol	Symbol designation	No	Symbol	Symbol designation
5.3		Magnetic filter	6. FITTINGS		
5.4		Separator	6.1		Funnel / waste tray
5.5		Steam trap	6.2		Drain
5.6		Centrifugal pump	6.3		Waste tray
5.7		Gear or screw pump	6.4		Waste tray with plug
5.8		Hand pump (bucket)	6.5		Turbocharger
5.9		Ejector	6.6		Fuel oil pump
5.10		Various accessories (text to be added)	6.7		Bearing
5.11		Piston pump	6.8		Water jacket
5.12		Heat exchanger	6.9		Overspeed device
5.13		Electric preheater	7. READING INSTR. WITH ORDINARY DESIGNATIONS		
5.14		Air filter	7.1		Sight flow indicator
5.15		Air filter with manual control	7.2		Observation glass
5.16		Air filter with automatic drain	7.3		Level indicator
5.17		Water trap with manual control	7.4		Distance level indicator
5.18		Air lubricator	7.5		Recorder
5.19		Silencer			
5.20		Fixed capacity pneumatic motor with direction of flow			
5.21		Single acting cylinder with spring returned			
5.22		Double acting cylinder with spring returned			
5.23		Steam trap			

2025-01-29 - en

List of Symbols

			General
Pipe dimensions and piping signature Pipe dimenesions			
A : Welded or seamless steel pipes.			B : Seamless precision steel pipes or Cu-pipes.
Normal Diameter DN	Outside Diameter mm	Wall Thickness mm	Stated: Outside diameter and wall thickness i.e. 18 x 2 Piping ▬▬▬▬: Built-on engine/Gearbox ▬▬▬▬: Yard supply Items connected by thick lines are built-on engine/ gearbox.
15 20 25 32 40 50 65 80 90 100 125 150 175 200	21.3 26.9 33.7 42.4 48.3 60.3 76.1 88.9 101.6 114.3 139.7 168.3 193.7 219.1	In accordance with classification or other rules	

2025-01-29 - en

1655279-1.4

Symbols for piping
Description

General						
	Pump, general	DIN 2481			Ballcock	
	Centrifugal pump	DIN 2481			Cock, three-way, L-port	
	Centrifugal pump with electric motor	DIN 2481			Double-non-return valve	DIN 74.253
	Gear pump	DIN 2481			Spectacle flange	DIN 2481
	Screw pump	DIN 2481			Spectacle flange, open	DIN 2481
	Screw pump with electric motor	DIN 2481			Spectacle flange, closed	DIN 2481
	Compressor	ISO 1219			Orifice	
	Heat exchanger	DIN 2481			Flexible pipe	
	Electric pre-heater	DIN 2481			Centrifuge	DIN 28.004
	Heating coil	DIN 8972			Suction bell	
	Non-return valve				Air vent	
	Butterfly valve				Sight glass	DIN 28.004
	Gate valve				Mudbox	
	Relief valve				Filter	
	Quick-closing valve				Filter with water trap	ISO 1219
	Self-closing valve				Typhon	DIN 74.253
	Back pressure valve				Pressure reducing valve (air)	ISO 1219
	Shut off valve				Oil trap	DIN 28.004
	Thermostatic valve				Accumulator	
	Pneumatic operated valve				Pressure reducing valve with pressure gauge	

2025-01-29 - en

General

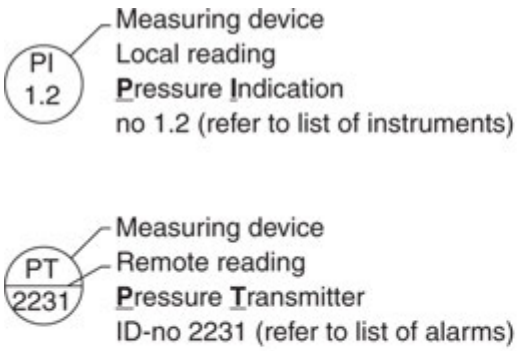

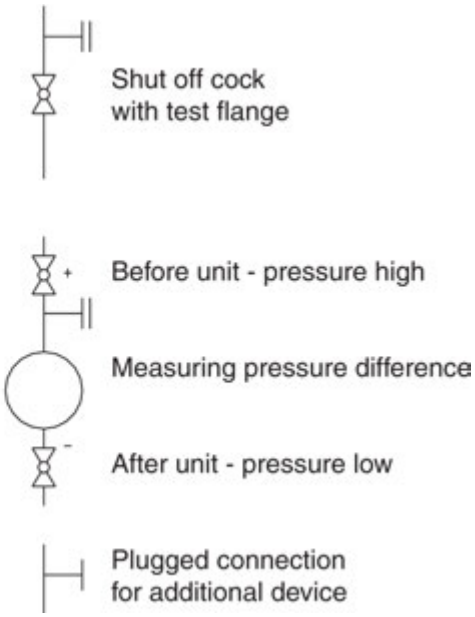

Specification of letter code for measuring devices

1st letter	Following letters
D : Density E : Electric F : Flow L : Level M ; Moisture P : Pressure S : Speed T : Temperature V : Viscosity Z : Position (ISO 3511/I-1977(E))	A : Alarm D : Difference E : Transducer H : High I : Indicating L : Low N : Closed O : Open S : Switching, shut down T : Transmitter X : Failure C : Controlling Z : Emergency/safety acting
The presence of a measuring device on a schematic diagram does not necessarily indicate that the device is included in our scope of supply. For each plant. The total extent of our supply will be stated formally.	

2025-01-29 - en

General

Specification of ID-no code for measuring signals/devices

1st digit	2nd digit
Refers to the main system to which the signal is related.	Refers to the auxillary system to which the signal is related.
1xxx : Engine	x0xx : LT cooling water
2xxx : Gearbox	x1xx : HT cooling water
3xxx : Propeller equipment	x2xx : Oil systems (lub. oil, cooling oil, clutch oil, servo oil)
4xxx : Automation equipment	x3xx : Air systems (starting air, control air, charging air)
5xxx : Other equipment, not related to the propulsion plant	x4xx : Fuel systems (fuel injection, fuel oil)
	x5xx :
	x6xx : Exhaust gas system
	x7xx : Power control systems (start, stop, clutch, speed, pitch)
	x8xx : Sea water
	x9xx : Miscellaneous (shaft, stern tube, sealing)

The last two digits are numeric ID for devices referring to the same main and aux. system.

Where dublicated measurements are carried out, i.e. multiple similar devices are measuring the same parameter, the ID specification is followed by a letter (A, B, ...etc.), in order to be able to separate the signals from each other.

2025-01-29 - en

Basic symbols for piping

2237	Spring operated safety valve										
2238	Mass operated Safety valve										
2228	Spring actuator										
2284	Float actuator										
2229	Mass										
2231	Membrane actuator										
2230	Piston actuator										
2232	Fluid actuator										
2223	Solenoid actuator										
2234	Electric motor actu-ator										
2235	Hand operated										
	Basic Symbol										
	Valves	584	585	593	588	592	590	591	604	605	579

584: Valve general
585: Valve with continuous regulation
593: Valve with safety function
588:Straight-way valve
592: Straight-way valve with continuous regulation
590:Angle valve
591: Three-way valve
604: Straight-way non return valve
605: Angle non-return valve
579: Non-return valve, ball type

2025-01-29 - en

1655279-1.4

	I - bored											
	L - bored											
	T - bored											
2237	Spring operated safety valve											
2238	Mass operated Safety valve											
2228	Spring actuator											
2284	Float actuator											
2229	Mass											
2231	Membrane actuator											
2230	Piston actuator											
2232	Fluid actuator											
2223	Solenoid actuator											
2234	Electric motor actuator											
2235	Hand operated											
	Basic Symbol											
	Valves	594	595	586	587	599	600	601	602	607	608	606

594: Straight-way reduction valve
595: Angle reduction valve
586: Gate valve
587: Gate valve with continuous regulation
599: Straight-way cock
600: Angle cock
601: Three-way cock
602: Four-way cock
607: Butterfly valve
608: Butterfly valve with continuous regulation
606: Non-return valve, flap type

Symbols for piping
Description

2025-01-29 - en

No	Symbol	Symbol designation	No	Symbol	Symbol designation
Miscellaneous			972		Pipe threaded connection
582		Funnel	xxx		Blind
581		Atomizer	Tanks		
583		Air venting	631		Tank with domed ends
6.25		Air venting to the outside	771		Tank with conical ends
299		Normal opening/ closing speed	yyy		Electrical insert heater
300		Quick opening/ closing speed	Heat exchanger		
613		Orifice with diffuser	8.03		Electrical preheater
612		Orifice	8.08		Heat exchanger
611		Sight glass	792		Nest of pipes with bends
615		Silencer	798		Plate heat exchanger
617		Berst membrane	Separators		
629		Condensate relief	761		Separator
580		Reducer	764		Disc separator
589		Measuring point for thermo element	Filters		
1298		Air relief valve	669		Air filter
Couplings/ Flanges			671		Fluid filter
167		Coupling	Coolers		
955		Flanged connection	16.03		Cooling tower
971		Clamped connection	16.06		Radiator cooler

2025-01-29 - en

No	Symbol	Symbol designation	No	Symbol	Symbol designation
Chimney			Pumps		
838		Chimney	708		Centrifugal pump
Expansion joints			697		Piston pump
2285		Expansion bellow	704		Piston pump - radial
4.1		Expansion pipe	700		Membrane pump
4.1.1.1		Loop expansion joint	702		Gear pump
4.1.1.2		Lyra expansion joint	705		Screw pump
4.1.1.3		Lens expansion joint	706		Mono pump
4.1.1.4		Expansion bellow	703		Hand vane pump
4.1.1.5		Steel tube	Motors		
4.1.1.6		Expansion joint with gland	13.14		Electrical motor AC
Compressors			13.14		Electrical motor AC
716		Piston compressor	13.14		Electrical motor AC
725		Turbo axial compressor	13.15		Electrical motor DC
726		Turbo dial compressor	13.15		Electrical motor DC
720		Roots compressor	13.15		Electrical motor DC
722		Screw compressors	13.15		Electrical motor DC
Ventilators			13.15		Electrical motor DC
637		Fan general	13.15		Electrical motor DC
638		Fan - radial	632		Turbine
639		Fan - axial	633		Piston engine

2025-01-29 - en

List of capacities

Capacities

5-8L23/30H: 130 kW/Cyl., 720 rpm or 135 kW/Cyl., 750 rpm			5	6	7	8
Engine output		kW	650/675	780/810	910/945	1040/1080
Speed		rpm	720/750	720/750	720/750	720/750
Heat to be dissipated [3]						
Cooling water cylinder		kW	182	219	257	294
Charge air cooler; cooling water HT (1 stage cooler: no HT-stage)		kW	-	-	-	-
Charge air cooler; cooling water LT		kW	251	299	348	395
Lubricating oil cooler		kW	69	84	98	112
Heat radiation engine		kW	27	33	38	44
Air data						
Temp. of charge air at charge air cooler outlet, max.		°C	55	55	55	55
Air flow rate		m^3/h [5]	4556	5467	6378	7289
		kg/kWh	7.39	7.39	7.39	7.39
Charge air pressure		bar (abs)	3.08	3.08	3.08	3.08
Air required to dissipate heat radiation (eng.) (t_2-t_1=10°C)		m^3/h	8749	10693	12313	14257
Exhaust gas data [6]						
Volume flow (temperature turbocharger outlet)		m^3/h [7]	9047	10856	12666	14475
Mass flow		t/h	5.1	6.1	7.2	8.2
Temperature at turbine outlet		°C	342	342	342	342
Heat content (190°C)		kW	234	280	327	374
Permissible exhaust back pressure		mbar	< 30	< 30	< 30	< 30
Permissible exhaust back pressure (SCR)		mbar	< 50	< 50	< 50	< 50
Pumps						
Engine driven pumps [4]						
Fuel oil feed pump	5.5-7.5 bar	m^3/h	1.0	1.0	1.0	1.0
HT cooling water pump	1-2.5 bar	m^3/h	36	36	36	36
LT cooling water pump	1-2.5 bar	m^3/h	55	55	55	55
Lubrication oil	3-5 bar	m^3/h	16	16	20	20
External pumps [8]						
Diesel oil pump	4 bar at fuel oil inlet A1	m^3/h	0.48	0.57	0.67	0.76
Fuel oil supply pump	4 bar discharge pressure	m^3/h	0.23	0.28	0.32	0.37
Fuel oil circulating pump [9]	8 bar at fuel oil inlet A1	m^3/h	0.48	0.57	0.67	0.76
Cooling water pumps "Internal cooling water system 1"						
LT cooling water pump	1-2.5 bar	m^3/h	35	42	48	55
"Internal cooling water system 2"						
HT cooling water pump	1-2.5 bar	m^3/h	20	24	28	32
LT cooling water pump	1-2.5 bar	m^3/h	35	42	48	55
Lubricating oil pump	3-5 bar	m^3/h	14	15	16	17
Starting air system						
Air consumption per start		Nm^3	1.40	1.43	1.50	1.54

2017-03-30 - en

3700041-2.2

5-8L23/30H: 130 kW/Cyl., 720 rpm or 135 kW/Cyl., 750 rpm		5	6	7	8
Nozzle cooling data [10)] Nozzle cooling data	m^3/h	0.66	0.66	0.66	0.66

List of capacities
Description

2017-03-30 - en

Conditions

Reference condition : Tropic		
Air temperature	°C	45
LT water temperature inlet engine (from system)	°C	36
Air pressure	bar	1
Relative humidity	%	50
Temperature basis:		
Set point HT cooling water engine outlet [1)]	°C	82°C nominal *(Range of mech. thermostatic element 79-88°C)*
Set point LT cooling water engine outlet [2)]	°C	35°C nominal *(Range of mech. thermostatic element 29-41°C)*
Set point lubrication oil inlet engine	°C	66°C nominal *(Range of mech. thermostatic element 63-72°C)*

Remarks to capacities

1) HT cooling water flows first through HT stage charge air cooler, then through water jacket and cylinder head, water temperature outlet engine regulated by mechanical thermostat.
2) LT cooling water flows first through LT stage charge air cooler, then through lube oil cooler, water temperature outlet engine regulated by mechanical thermostat.
3) Tolerance: + 10% for rating coolers, - 15% for heat recovery.
4) Basic values for layout of the coolers.
5) Under above mentioned reference conditions.
6) Tolerance: quantity +/- 5%, temperature +/- 20°C.
7) Under below mentioned temperature at turbine outlet and pressure according above mentioned reference conditions.
8) Tolerance of the pumps' delivery capacities must be considered by the manufactures.
9) In order to ensure sufficient flow through the engine fuel system the capacity of the fuel oil circulation pumps must be minimum 3 times the full load consumption of the installed engines
10) Not applicable for engines which are equipped with internal nozzle cooling (INC)

NOTICE

High temperature alarms can occur for some engine types running 100% MCR with SCR catalyst (50 mbar exhaust back pressure) and tropical condition (ambient air 45°C & LT-water 36°C).

2017-03-30 - en

This page is intentionally left blank

2017-03-30 - en

List of capacities

Capacities

6-8L23/30H: 160 kW/Cyl., 900 rpm			6	7	8
Engine output		kW	960	1120	1280
Speed		rpm	900	900	900
Heat to be dissipated [3]					
Cooling water cylinder		kW	244	285	326
Charge air cooler; cooling water HT					
1 stage cooler: no HT-stage		kW	-	-	-
Charge air cooler; cooling water LT		kW	369	428	487
Lubricating oil cooler		kW	117	137	158
Heat radiation engine		kW	32	37	43
Air data					
Temp. of charge air at charge air cooler outlet, max.		°C	55	55	55
Air flow rate		m^3/h [5]	6725	7845	8966
		kg/kWh	7.67	7.67	7.67
Charge air pressure		bar (abs)	3.1	3.1	3.1
Air required to dissipate heat radiation (eng.) (t_2-t_1=10°C)		m^3/h	10369	11989	13933
Exhaust gas data [6]					
Volume flow (temperature turbocharger outlet)		m^3/h [7]	13970	16299	18627
Mass flow		t/h	7.6	8.8	10.1
Temperature at turbine outlet		°C	371	371	371
Heat content (190°C)		kW	410	479	547
Permissible exhaust back pressure		mbar	< 30	< 30	< 30
Permissible exhaust back pressure (SCR)		mbar	<50	<50	<50
Pumps					
Engine driven pumps [4]					
Fuel oil feed pump	5.5-7.5 bar	m^3/h	1.3	1.3	1.3
HT cooling water pump	1-2.5 bar	m^3/h	45	45	45
LT cooling water pump	1-2.5 bar	m^3/h	69	69	69
Lubrication oil	3-5 bar	m^3/h	20	20	20
External pumps [8]					
Diesel oil pump	4 bar at fuel oil inlet A1	m^3/h	0.68	0.79	0.90
Fuel oil supply pump	4 bar discharge pressure	m^3/h	0.33	0.38	0.44
Fuel oil circulating pump [9]	8 bar at fuel oil inlet A1	m^3/h	0.68	0.79	0.90
Cooling water pumps for "Internal cooling water system 1"					
LT cooling water pump	1-2.5 bar	m^3/h	52	61	70
"Internal cooling water system 2"					
HT cooling water pump	1-2.5 bar	m^3/h	30	35	40
LT cooling water pump	1-2.5 bar	m^3/h	52	61	70
Lubricating oil pump	3-5 bar	m^3/h	17	18	19
Starting air system					
Air consumption per start		Nm^3	1.43	1.50	1.54

2017-03-30 - en

3700042-4.2

6-8L23/30H: 160 kW/Cyl., 900 rpm		6	7	8
Nozzle cooling data [10)] Nozzle cooling data	m^3/h	0.66	0.66	0.66

List of capacities
Description

2017-03-30 - en

Conditions

Reference condition : Tropic		
Air temperature	°C	45
LT water temperature inlet engine (from system)	°C	36
Air pressure	bar	1
Relative humidity	%	50
Temperature basis:		
Set point HT cooling water engine outlet [1)]	°C	82°C nominal *(Range of mech. thermostatic element 79-88°C)*
Set point LT cooling water engine outlet [2)]	°C	35°C nominal *(Range of mech. thermostatic element 29-41°C)*
Set point lubrication oil inlet engine	°C	66°C nominal *(Range of mech. thermostatic element 63-72°C)*

Remarks to capacities

1) HT cooling water flows first through HT stage charge air cooler, then through water jacket and cylinder head, water temperature outlet engine regulated by mechanical thermostat.
2) LT cooling water flows first through LT stage charge air cooler, then through lube oil cooler, water temperature outlet engine regulated by mechanical thermostat.
3) Tolerance: + 10% for rating coolers, - 15% for heat recovery.
4) Basic values for layout of the coolers.
5) Under above mentioned reference conditions.
6) Tolerance: quantity +/- 5%, temperature +/- 20°C.
7) Under below mentioned temperature at turbine outlet and pressure according above mentioned reference conditions.
8) Tolerance of the pumps' delivery capacities must be considered by the manufactures.
9) In order to ensure sufficient flow through the engine fuel system the capacity of the fuel oil circulation pumps must be minimum 3 times the full load consumption of the installed engines
10) Not applicable for engines which are equipped with internal nozzle cooling (INC)

NOTICE

High temperature alarms can occur for some engine types running 100% MCR with SCR catalyst (50 mbar exhaust back pressure) and tropical condition (ambient air 45°C & LT-water 36°C).

2017-03-30 - en

This page is intentionally left blank

2017-03-30 - en

Vibration limits and measurements

GenSet

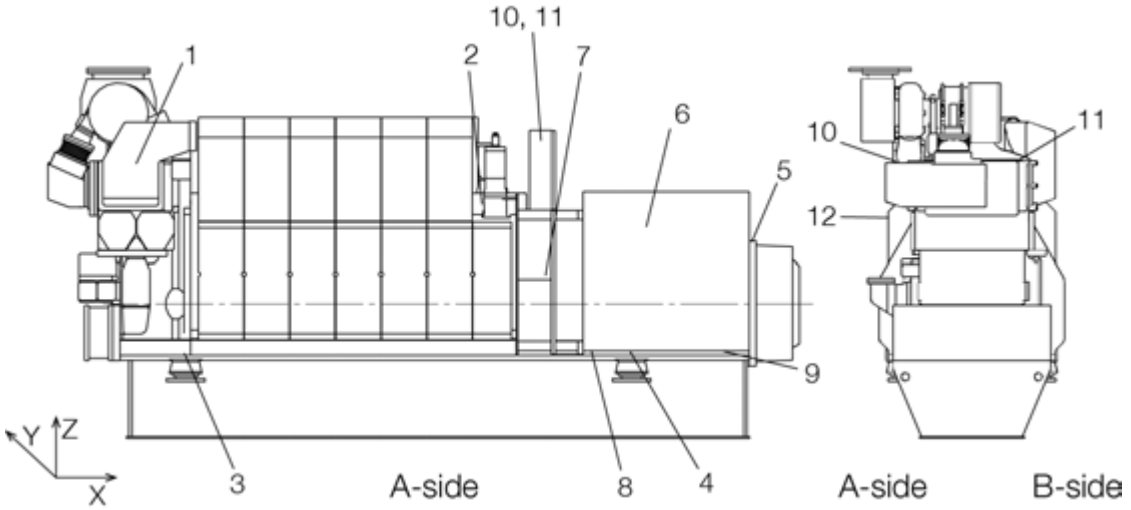

Measurement point	Description	Limit	Measurement point	Description	Limit	Measurement point	Description	Limit
1	TC fore	18	5	Aft alternator bearing	18	9	Alternator foot	See below *
2	Governor/TC aft	18	6	Alternator cooler	25	10	Automation box A-side	25
3	Front support	18	7	Intermediate bearing	18	11	Automation box B-side	25
4	Aft support	18	8	Alternator foot	See below *	12	T&P panel	25

Engine: VDI 2063T
Alternator: ISO 8528-9, DIN 6280-11
Note: All measurements are specified as mm/s r.m.s.

* Alternator	Value 1	Value 2
P ≤ 1250 kVA	20	24
P > 1250 kVA	18	22

Value 1 or 2 are depending on alternator make

Date	Running Hours	Load %	Vertical (z) (Engine oriented)											
			1	2	3	4	5	6	7	8	9	10	11	12
		100												
			Crosswise (y) (Engine oriented)											
		100												
			Longitudinal (x) (Engine oriented)											
		100												

2025-03-10 - en

Turbocharger

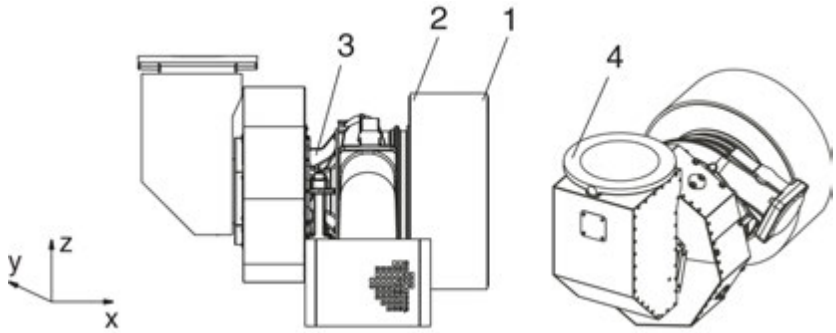

Vibration acceleration measuring point, see the project guide for turbocharger.

Turbocharger type		Recommendation						Contact engine builder					
		Meas. pt (1)		Meas. pt (2+3)		Meas. pt (4)		Meas. pt (1)		Meas. pt (2+3)		Meas. pt (4)	
	f (Hz)	mm/s	g	mm/s	g	mm/s	g	mm/s	g	mm/s	g	mm/s	g
TCR10			2.9		2.2		2.9		6.4		3.2		5.8
TCR12 NR12			2.6		2.0		2.6		5.8		2.9		5.2
TCR14 NR14, NR15, NR17	3-300	45	2.0	35	1.6	45	2.0	100	4.5	50	2.2	90	4.0
TCR16 NR20			1.7		1.4		1.7		3.8		1.9		3.5
TCR18 NR20, NR24			1.4		1.1		1.4		3.2		1.6		2.9
TCR20 NR24, NR26			1.2		0.9		1.2		2.6		1.3		2.3
TCR22			0.9		0.7		0.9		1.9		1.0		1.7

Turbocharger vibration limit values - measuring point

Date	Running Hours	Load %	**Vertical (z)** (Turbocharger oriented)			
			1	2	3	4
Shop test		100				
			Crosswise (y) (Turbocharger oriented)			
		100				
			Longitudinal (x) (Turbocharger oriented)			
		100				

2025-03-10 - en

Description of sound measurements

General

Purpose

This should be seen as an easily comprehensible sound analysis of MAN GenSets. These measurements can be used in the project phase as a basis for decisions concerning damping and isolation in buildings, engine rooms and around exhaust systems.

Measuring equipment

All measurements have been made with Precision Sound Level Meters according to standard IEC Publication 651or 804, type 1 – with 1/1 or 1/3 octave filters according to standard IEC Publication 225. Used sound calibrators are according to standard IEC Publication 942, class 1.

Definitions

Sound Pressure Level: $L_P = 20 \times \log P/P_0$ [dB]

where P is the RMS value of sound pressure in pascals, and P_0 is 20 µPa for measurement in air.

Sound Power Level: $L_W = 10 \times \log P/P_0$ [dB]

where P is the RMS value of sound power in watts, and P_0 is 1 pW.

Measuring conditions

All measurements are carried out in one of MAN Energy Solutions' test bed facilities.

During measurements, the exhaust gas is led outside the test bed through a silencer. The GenSet is placed on a resilient bed with generator and engine on a common base frame.

Sound Power is normally determined from Sound Pressure measurements.

New measurement of exhaust sound is carried out at the test bed, unsilenced, directly after turbocharger, with a probe microphone inside the exhaust pipe.

Previously used method for measuring exhaust sound are DS/ISO 2923 and DIN 45635, here is measured on unsilenced exhaust sound, one meter from the opening of the exhaust pipe, see fig.1.

Sound measuring "on-site"

The Sound Power Level can be directly applied to on-site conditions. It does not, however, necessarily result in the same Sound Pressure Level as measured on test bed.

Normally the Sound Pressure Level on-site is 3-5 dB higher than the given surface Sound Pressure Level (L_{pf}) measured at test bed. However, it depends strongly on the acoustical properties of the actual engine room.

Standards

Determination of Sound Power from Sound Pressure measurements will normally be carried out according to:

2025-03-10 - en

ISO 3744 (Measuring method, instruments, background noise, no of microphone positions etc) and ISO 3746 (Accuracy due to criterion for suitability of test environment, K2>2 dB).

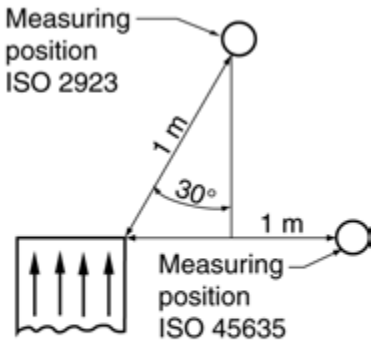

Figure 1: .

2025-03-10 - en

Description of structure-borne noise

Introduction

This paper describes typical structure-borne noise levels from standard resiliently mounted MAN-ES small-bore engines. The levels can be used in the project phase as a reasonable basis for decisions concerning damping and insulation, engine rooms and surroundings in order to avoid noise and vibration problems.

References

References and guidelines according to ISO 9611 and ISO 11689.

Operating condition

Levels are valid for standard resilient mounted engine on flexible rubber support of 55° sh (A) on relatively stiff and well-supported foundations.

Frequency range

The levels are valid in the frequency range 31.5 Hz to 4 kHz.

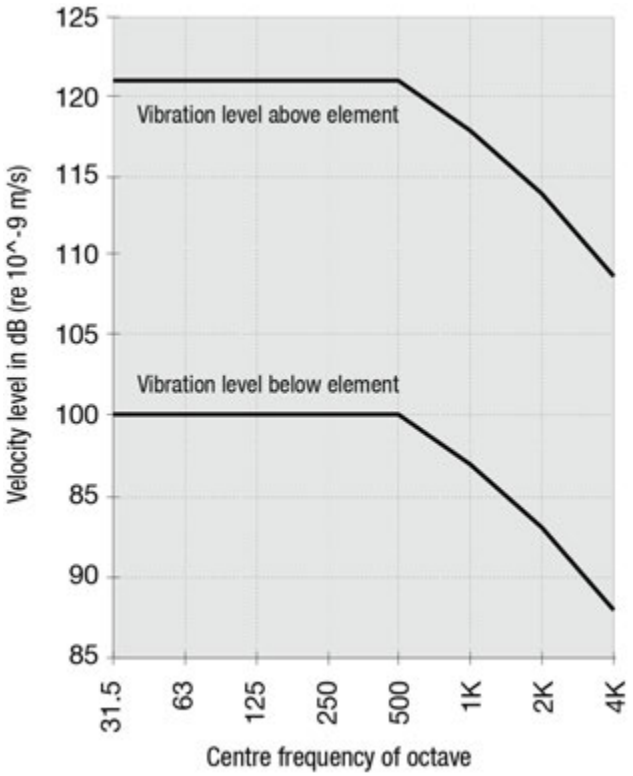

Figure 1: Structure-borne noise on resiliently mounted engine.

Stiffness according to minimum requirement, see "*Recommendations concerning steel foundations for resilient mounted GenSets, B 20 01 0*"

2025-03-10 - en

This page is intentionally left blank

Exhaust gas components

Exhaust gas components of medium speed four-stroke diesel engines

The exhaust gas is composed of numerous constituents which are formed either from the combustion air, the fuel and lube oil used or which are chemical reaction products formed during the combustion process. Only some of these are to be considered as harmful substances.

For the typical exhaust gas composition of a MAN Energy Solutions four-stroke engine without any exhaust gas treatment devices, please see tables below (only for guidance). All engines produced currently fulfil IMO Tier II.

Carbon dioxide CO_2

Carbon dioxide (CO2) is a product of combustion of all fossil fuels.

Among all internal combustion engines the diesel engine has the lowest specific CO2 emission based on the same fuel quality, due to its superior efficiency.

Sulphur oxides SO_X

Sulphur oxides (SO_X) are formed by the combustion of the sulphur contained in the fuel.

Among all propulsion systems the diesel process results in the lowest specific SOx emission based on the same fuel quality, due to its superior efficiency.

Nitrogen oxides NO_X

The high temperatures prevailing in the combustion chamber of an internal combustion engine causes the chemical reaction of nitrogen (contained in the combustion air as well as in some fuel grades) and oxygen (contained in the combustion air) to nitrogen oxides (NO_X).

Carbon monoxide CO

Carbon monoxide (CO) is formed during incomplete combustion.

In MAN Energy Solutions four-stroke diesel engines, optimisation of mixture formation and turbocharging process successfully reduces the CO content of the exhaust gas to a very low level.

Hydrocarbons HC

The hydrocarbons (HC) contained in the exhaust gas are composed of a multitude of various organic compounds as a result of incomplete combustion. Due to the efficient combustion process, the HC content of exhaust gas of MAN Energy Solutions four-stroke diesel engines is at a very low level.

Particulate matter PM

Particulate matter (PM) consists of soot (elemental carbon) and ash.

2025-01-13 - en

1655210-7.5

Main exhaust gas constituents	approx. [% by volume]	approx. [g/kWh]
Nitrogen N_2	74.0 - 76.0	5,020 - 5,160
Oxygen O_2	11.6 - 13.2	900 - 1,030
Carbon dioxide CO_2	5.2 - 5.8	560 - 620
Steam H_2O	5.9 - 8.6	260 - 370
Inert gases Ar, Ne, He ...	0.9	75
Total	> 99.75	7,000

Additional gaseous exhaust gas constituents considered as pollutants	approx. [% by volume]	approx. [g/kWh]
Sulphur oxides SO_X[1]	0.07	10.0
Nitrogen oxides NO_X[2]	0.07 - 0.10	8.0 - 10.0
Carbon monoxide CO[3]	0.006 - 0.011	0.4 - 0.8
Hydrocarbons HC[4]	0.01 - 0.04	0.4 - 1.2
Total	< 0.25	26

Additional suspended exhaust gas constituents, PM[5]	approx. [mg/Nm³]		approx. [g/kWh]	
	operating on		operating on	
	MGO[6]	HFO[7]	MGO[6]	HFO[7]
Soot (elemental carbon)[8]	50	50	0.3	0.3
Fuel ash	4	40	0.03	0.25
Lube oil ash	3	8	0.02	0.04

Note!
At rated power and without exhaust gas treatment.

1) SO_X, according to ISO-8178 or US EPA method 6C, with a sulphur content in the fuel oil of 2.5% by weight.
2) NO_X according to ISO-8178 or US EPA method 7E, total NO_X emission calculated as NO_2.
3) CO according to ISO-8178 or US EPA method 10.
4) HC according to ISO-8178 or US EPA method 25A.
5) PM according to VDI-2066, EN-13284, ISO-9096 or US EPA method 17; in-stack filtration.
6) Marine gas oil DM-A grade with an ash content of the fuel oil of 0.01% and an ash content of the lube oil of 1.5%.
7) Heavy fuel oil RM-B grade with an ash content of the fuel oil of 0.1% and an ash content of the lube oil of 4.0%.
8) Pure soot, without ash or any other particle-borne constituents.

Exhaust gas components
Description

2025-01-13 - en

NOx emission

Maximum allowed emission value NOx

Related speed	rpm	720	750	800	900	1000	1200
IMO Tier II cycle D2/E2/E3	g/kWh	9.69	9.60	9.46	9.20	8.98	8.61
IMO Tier III cycle D2/E2/E3	g/kWh	2.41	2.39	2.36	2.31	2.26	2.18

Marine engines are guaranteed to meet the revised International Convention for the Prevention of Pollution from Ships, “Revised MARPOL Annex VI (Regulations for the prevention of air pollution from ships), Regulation 13 as adopted by the International Maritime Organization (IMO).

Cycle values as per ISO 8178-4: 2007, operating on ISO 8217 DM grade fuel (marine distillate fuel: MGO or MDO).

Maximum allowed NO_x emissions for marine diesel engines according to IMO Tier II:
$130 \leq n \leq 2000 \rightarrow 44 \times n^{-0,23}$ g/kWh (n = rated engine speed in rpm)

Maximum allowed NO_x emissions for marine diesel engines according to IMO Tier III:
$130 \leq n \leq 2000 \rightarrow 9 \times n^{-0,2}$ g/kWh (n = rated engine speed in rpm)

Calculated as NO_2:
D2:Test cycle for “Constant-speed auxiliary engine” application
E2: Test cycle for “Constant-speed main propulsion” application including diesel-electric drive and all controllable pitch propeller installations
E3: Test cycle for “Propeller-law-operated main and propeller-law operated auxiliary engine” application

Specified reference charge air temperature corresponds to an average value for all cylinders that will be achieved with 25°C LT cooling water temperature before charge air cooler (as according to ISO).

Dual-fuel engines (L23/30DF and L28/32DF) comply with IMO Tier III emission rules without exhaust gas after treatment.

Methanol DF-M engines (L21/31) will only comply with IMO Tier II emission rules without exhaust gas after treatment.

Liquid fuel engines (HFO, MDO, MGO etc.) can only comply with IMO Tier III emission rules with use of exhaust gas after treatment (example SCR).

NOTICE

The engine´s certification for compliance with the NO_x limits will be carried out during factory acceptance test, FAT as a single or a group certification.

2025-03-10 - en

This page is intentionally left blank

2025-03-10 - en

Moment of inertia

GenSet

No. of cyl.	Generator type	Max. cont. rating kW	Speed rpm	Moment of inertia (J)			
				Engine kgm²	Flywheel kgm²	Generator *** kgm²	Total kgm²
6	DIDBN* 121k/10	780	720	37.4	273.5	132.0	442.9
	DIDBN* 121j/8	810	750	37.4	273.5	94.0	404.9
	LSA** 52B L9/8p	960	900	65.5	273.5	83.0	422.0
7	DIDBN* 131h/10	910	720	61.4	100.0	170.0	331.4
	DIDBN* 121k/8	945	750	61.4	100.0	110.0	271.4
	LSA** 54 VS4/8p	1120	900	47.9	111.3	120.0	279.2
8	DIDBN* 131j/10	1040	720	49.6	100.0	200.0	349.6
	DIDBN* 131h/8	1080	750	49.6	100.0	152.0	301.6
	LSA** 54 VS5/8p	1280	900	78.5	273.5	133.3	485.3

*	Generator, make A. van Kaick
**	Generator, make Leroy Somer
***	If other generator is chosen the values will change.
	Moment of intertia : $GD^2 = J \times 4$ (kgm^2)

2016-01-07 - en

This page is intentionally left blank

2016-01-07 - en

Inclination of engines

Description

All engines are as standard designed for and approved by leading classification societies to be in accordance with IACS's demands for inclination of ships, that means the following angles (°) of inclination.

Max. permissible angle of inclination [°] [1]					
Application	Athwartships α		Fore and aft β		
	Heel to each side (static)	Rolling to each side (dynamic)	Trim (static) [2]		Pitching (dynamic)
			L < 100 m	L > 100 m	
GenSet/ Main engines	15	22.5	5	500/L	7.5

[1] Athwartships and fore and aft inclinations may occur simultaneously.
[2] Depending on length L of the ship.

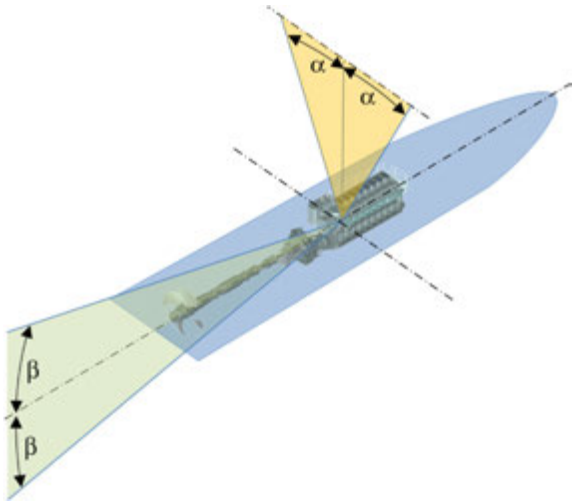

α Athwartships β Fore and aft

Figure 1: Angle of inclination.

NOTICE

For higher requirements contact MAN Energy Solutions. Arrange engines always lengthwise of the ship.

2025-02-19 - en

This page is intentionally left blank

2025-02-19 - en

Green Passport

Green Passport

In 2009 IMO adopted the „Hong Kong International Convention for the Safe and Environmentally Sound Recycling of Ships, 2009“.

Until this convention enters into force the recommendatory guidelines “Resolution A.962(23)” (adopted 2003) apply. This resolution has been implemented by some classification societies as “Green Passport”.

MAN Energy Solutions is able to provide a list of hazardous materials complying with the requirements of the IMO Convention. This list is accepted by classification societies as a material declaration for “Green Passport”.

This material declaration can be provided on request.

2025-03-10 - en

This page is intentionally left blank

GenSet extension of TBO (Time Between Overhaul)

Condition based overhaul

The market trend for our engines are that maintenance programmes are changed from programme-based to condition-based overhaul intervals where various inspections and control parametes can be set up as indicators of the present condition. This will enable the operator to judge and predict the schedule for next maintenance operation.

Based on market feedback and experience gained over the years we have worked out a planned maintenance programme for our GenSet which mainly is based on operating hours referred to as recommended Time Between Overhaul (TBO).

As per the service instruction manual the TBO for GenSet is originally recommended at 12,000 to 16,000 hours for the major overhauls.

It is now documented that the GenSet can reach a TBO of 20,000 - 22,000 hours in HFO operation provided that the engine is operated according to the instruction manual, that the following parts are installed and that the below-mentioned guidelines are followed:

1. T/C wet and dry cleaning (More information, see SL2015-597)
   W-W: Weekly Wet cleaning
   D-D: Daily Dry cleaning
2. Installation of backflush filter 6/10µm in the external fuel oil system according to MAN recommendations (More information, see SL2016-615)
3. Mandatory use of on board lubricating oil purifiers (treatment and maintenance of lubricating oil (More information, see SL2013-582)
4. GenSet engine is build according to newest design specification
   - Installation of 25mµ safety filter in the internal fuel oil system (More information, see SL2013-577)
   - Lubricating oil centrifugal filter is installed at engine (standard)
   - Charge air preheating is installed at engine (option)

NOTICE

It is important to note and remember:
Availability of tools for both wet and dry cleaning to be observed

2025-03-10 - en

In general, we recommend the operators of our engines to closely monitor the operation parameters and keep records of these in order to follow the trends of the engine performance.

The condition-based maintenance system is based on observations and safe operation.
For evaluation of condition, the below list of service letters, must be considered and followed.

1) Lub. oil treatment (SL2013-582)
2) Fuel injection valve condition (SL2016-628)
3) Cooling water treatment (SL2016-623)
4) Fuel oil cleaning (SL2017-640)
5) Cleaning of condensate drain (SL2017-649)
6) Quality of fuel (SL2010-527)

It is therefore necessary to change the maintenance intervals on the GenSets when changing from programme-based to conditioned-based maintenance.

New maintenance programme is issued in cooperation with MAN Energy Solutions.

2025-03-10 - en

Overhaul recommendation, Maintenance and Expected life time

Component	Overhaul Recommendations, Maintenance and Expected Life Time	Time between overhauls (TBO) Hours	Expected life time Hours
Main bearing (1 bearing)	Inspection Retightening *	32.000	64.000
Connecting rod	Inspection	32.000	64.000
Big-end bearing	Inspection Retightening *	32.000	64.000
Camshaft	Inspection of cams surface	8.000	64.000
Piston	Overhaul and measuring of ring grooves Replacement of compression rings and scraper rings	32.000 32.000	64.000 32.000
Cylinder liner	Inspection, measuring and honing of running surface condition	32.000	64.000
Cylinder head		32.000	64.000
Valve clearance	Checking and adjustment	8.000	
Fuel injection valve	Checking, cleaning and adjustment of opening pressure 3)	Based on observation	8000 3)
Inlet and Exhaust valve	Overhaul and regrinding of spindle	32.000	64.000
Valve seat ring	Exchange and grinding	32.000	32.000
Rotorcap	Function check of rotation	2.000	32.000
Valve guide	Measuring of inside diameter	32.000	64.000
Cylinder head nuts	Retightening *		
Fuel pump	Fuel pump barrel/plunger assembly.	Based on observation	32.000
Lub. Oil pump	Overhaul	32.000	64.000
Cooling water pumps	Overhaul	32.000	64.000
Air Cooler	Cleaning and pressure testing	32.000	64.000
Compr. air system	Check of compressed air system, air starter	32.000	
Autolog reading	Check once a year or in connection with	Once a year	
Lub. oil filter cartr.	Replacement based on observations of pressure drop		1.500
Regulating system	Function check of overspeed and shutdown devices. Check that the control rod of each individual fuel pump can easily go to "stop" position	Quarterly	
Flexible mountings	Check anti-vibration mountings	Quarterly	
Vibration viscodamper	Check of condition and wear	28-32.000	
Turbocharger	Water washing of compressor side Water washing of turbine side Dry cleaning of turbine side Air filter cleaning	Based on observation Based on observation Based on observation	

* After starting up and before loading engine.

** Time between overhauls:
It is a precondition for the validity of the values stated above, that the engine is operated in accordance with our instructions and recommendations for cleaning of fuel and lub. oil and original spare parts are used.

In the Project Guide, see Lub. oil treatment, in section B 12 00 0 for GenSet. Fuel oil specification in section B 11 00 0 for GenSet / 14 000 for Propulsion.

In the Instruction Manual, see Lub. oil treatment and Fuel oil specification in section 504/604 for GenSet and L21/31 Propulsion. For Propulsion L27/38, L23/30A, L28/32A see section 1.00 "data".

1) Island mode, max. 75% average load
2) Parallel running with public grid, up to 100% load
3) See work card in Instruction Manual, section 514/614 for fuel injection valve
4) Time can be adjusted according to performance observations

NOTICE TBO Crude oil equal to HFO. TBO Biofuel equal to MDO, except for fuel equipment case by case depending on TAN number

2020-11-12 - en

This page is intentionally left blank

Overhaul recommendation, Maintenance and Expected life time

Component	Overhaul Recommendations, Maintenance and Expected Life Time	Time between overhauls (TBO) Hours	Expected life time Hours
Main bearing (1 bearing)	Inspection Retightening *	20.000	60.000
Connecting rod	Inspection	20.000	60.000
Big-end bearing	Inspection Retightening *	20.000	40.000
Camshaft	Inspection of cams surface	8.000	60.000
Piston	Overhaul and measuring of ring grooves Replacement of compression rings and scraper rings	20.000 20.000	60.000 20.000
Cylinder liner	Inspection, measuring and honing of running surface condition	20.000	60.000
Cylinder head		20.000	60.000
Valve clearance	Checking and adjustment	8.000	
Fuel injection valve	Checking, cleaning and adjustment of opening pressure [3]	Based on observation	8000 [3]
Inlet and Exhaust valve	Overhaul and regrinding of spindle	20.000	40.000
Valve seat ring	Exchange and grinding	20.000	20.000
Rotorcap	Function check of rotation	2.000	40.000
Valve guide	Measuring of inside diameter	20.000	40.000
Cylinder head nuts	Retightening *		
Fuel pump	Fuel pump barrel/plunger assembly.	Based on observation	20.000
Lub. Oil pump	Overhaul	20.000	60.000
Cooling water pumps	Overhaul	20.000	64.000
Air Cooler	Cleaning and pressure testing	20.000	60.000
Compr. air system	Check of compressed air system, air starter	20.000	
Autolog reading	Check once a year or in connection with	Once a year	
Lub. oil filter cartr.	Replacement based on observations of pressure drop		1.000
Regulating system	Function check of overspeed and shutdown devices. Check that the control rod of each individual fuel pump can easily go to "stop" position	Quarterly	
Flexible mountings	Check anti-vibration mountings	Quarterly	
Vibration viscodamper	Check of condition and wear	28-32.000	
Turbocharger	Water washing of compressor side Water washing of turbine side Dry cleaning of turbine side Air filter cleaning	Based on observation 150 [4] Daily [4] Based on observation	

* After starting up and before loading engine.

** Time between overhauls:
It is a precondition for the validity of the values stated above, that the engine is operated in accordance with our instructions and recommendations for cleaning of fuel and lub. oil and original spare parts are used.

In the Project Guide, see Lub. oil treatment, in section B 12 00 0 for GenSet. Fuel oil specification in section B 11 00 0 for GenSet / 14 000 for Propulsion.

In the Instruction Manual, see Lub. oil treatment and Fuel oil specification in section 504/604 for GenSet and L21/31 Propulsion. For Propulsion L27/38, L23/30A, L28/32A see section 1.00 "data".

1) Island mode, max. 75% average load
2) Parallel running with public grid, up to 100% load
3) See work card in Instruction Manual, section 514/614 for fuel injection valve
4) Time can be adjusted according to performance observations

NOTICE TBO Crude oil equal to HFO. TBO Biofuel equal to MDO, except for fuel equipment case by case depending on TAN number

2020-11-12 - en

This page is intentionally left blank

Overhaul recommendation, Maintenance and Expected life time

Component	Overhaul Recommendations, Maintenance and Expected Life Time	Time between overhauls (TBO) Hours	Expected life time Hours
Main bearing (1 bearing)	Inspection Retightening *	20.000	60.000
Connecting rod	Inspection	20000	60.000
Big-end bearing	Inspection Retightening *	20.000	40.000
Camshaft	Inspection of cams surface	8.000	60.000
Piston	Overhaul and measuring of ring grooves Replacement of compression rings and scraper rings	20.000 20.000	60.000 20.000
Cylinder liner	Inspection, measuring and honing of running surface condition	20.000	60.000
Cylinder head		20.000	60.000
Valve clearance	Checking and adjustment	8.000	
Fuel injection valve	Checking, cleaning and adjustment of opening pressure 3)	Based on observation	8000 3)
Inlet and Exhaust valve	Overhaul and regrinding of spindle	20.000	40.000
Valve seat ring	Exchange and grinding	20.000	20.000
Rotorcap	Function check of rotation	2.000	40.000
Valve guide	Measuring of inside diameter	20.000	40.000
Cylinder head nuts	Retightening *		
Fuel pump	Fuel pump barrel/plunger assembly.	Based on observation	20.000
Lub. Oil pump	Overhaul	20.000	60.000
Cooling water pumps	Overhaul	20.000	64.000
Air Cooler	Cleaning and pressure testing	20.000	60.000
Compr. air system	Check of compressed air system, air starter	20.000	
Autolog reading	Check once a year or in connection with	Once a year	
Lub. oil filter cartr.	Replacement based on observations of pressure drop		1.500
Regulating system	Function check of overspeed and shutdown devices. Check that the control rod of each individual fuel pump can easily go to "stop" position	Quarterly	
Flexible mountings	Check anti-vibration mountings	Quarterly	
Vibration viscodamper	Check of condition and wear	28-32.000	
Turbocharger	Water washing of compressor side Water washing of turbine side Dry cleaning of turbine side Air filter cleaning	Based on observation Based on observation Based on observation	

* After starting up and before loading engine.

** Time between overhauls:
It is a precondition for the validity of the values stated above, that the engine is operated in accordance with our instructions and recommendations for cleaning of fuel and lub. oil and original spare parts are used.

In the Project Guide, see Lub. oil treatment, in section B 12 00 0 for GenSet. Fuel oil specification in section B 11 00 0 for GenSet / 14 000 for Propulsion.

In the Instruction Manual, see Lub. oil treatment and Fuel oil specification in section 504/604 for GenSet and L21/31 Propulsion. For Propulsion L27/38, L23/30A, L28/32A see section 1.00 "data".

1) Island mode, max. 75% average load
2) Parallel running with public grid, up to 100% load
3) See work card in Instruction Manual, section 514/614 for fuel injection valve
4) Time can be adjusted according to performance observations

NOTICE TBO Crude oil equal to HFO. TBO Biofuel equal to MDO, except for fuel equipment case by case depending on TAN number

2020-11-12 - en

This page is intentionally left blank

Overhaul recommendation, Maintenance and Expected life time

Component	Overhaul Recommendations, Maintenance and Expected Life Time	Time between overhauls (TBO) Hours	Expected life time Hours
Main bearing (1 bearing)	Inspection Retightening *	16.000	48.000
Connecting rod	Inspection	16.000	48.000
Big-end bearing	Inspection Retightening *	16.000	32.000
Camshaft	Inspection of cams surface	8.000	48.000
Piston	Overhaul and measuring of ring grooves Replacement of compression rings and scraper rings	16.000 16.000	48.000 16.000
Cylinder liner	Inspection, measuring and honing of running surface condition	16.000	48.000
Cylinder head		16.000	48.000
Valve clearance	Checking and adjustment	8.000	
Fuel injection valve	Checking, cleaning and adjustment of opening pressure [3]	Based on observation	8000 [3]
Inlet and Exhaust valve	Overhaul and regrinding of spindle	16.000	32.000
Valve seat ring	Exchange and grinding	16.000	16.000
Rotorcap	Function check of rotation	2.000	32.000
Valve guide	Measuring of inside diameter	16.000	32.000
Cylinder head nuts	Retightening *		
Fuel pump	Fuel pump barrel/plunger assembly.	Based on observation	16.000
Lub. Oil pump	Overhaul	16.000	64.000
Cooling water pumps	Overhaul	16.000	64.000
Air Cooler	Cleaning and pressure testing	32.000	72.000
Compr. air system	Check of compressed air system, air starter	16.000	
Autolog reading	Check once a year or in connection with	Once a year	
Lub. oil filter cartr.	Replacement based on observations of pressure drop		1.000
Regulating system	Function check of overspeed and shutdown devices. Check that the control rod of each individual fuel pump can easily go to "stop" position	Quarterly	
Flexible mountings	Check anti-vibration mountings	Quarterly	
Vibration viscodamper	Check of condition and wear	28-32.000	
Turbocharger	Water washing of compressor side Water washing of turbine side Dry cleaning of turbine side Air filter cleaning	Based on observation 150 [4] Daily [4] Based on observation	

* After starting up and before loading engine.

** Time between overhauls:
It is a precondition for the validity of the values stated above, that the engine is operated in accordance with our instructions and recommendations for cleaning of fuel and lub. oil and original spare parts are used.

In the Project Guide, see Lub. oil treatment, in section B 12 00 0 for GenSet. Fuel oil specification in section B 11 00 0 for GenSet / 14 000 for Propulsion.

In the Instruction Manual, see Lub. oil treatment and Fuel oil specification in section 504/604 for GenSet and L21/31 Propulsion. For Propulsion L27/38, L23/30A, L28/32A see section 1.00 "data".

1) Island mode, max. 75% average load
2) Parallel running with public grid, up to 100% load
3) See work card in Instruction Manual, section 514/614 for fuel injection valve
4) Time can be adjusted according to performance observations

NOTICE TBO Crude oil equal to HFO. TBO Biofuel equal to MDO, except for fuel equipment case by case depending on TAN number

2020-11-12 - en

This page is intentionally left blank

Power, outputs, speed

Engine ratings

Engine type No of cylinders	720 rpm		750 rpm		900 rpm	
	720 rpm	Available turning direction	750 rpm	Available turning direction	900 rpm	Available turning direction
	kW	CW [1]	kW	CW [1]	kW	CW [1]
5L23/30H	650	Yes	675	Yes	–	–
6L23/30H	780	Yes	810	Yes	960	Yes
7L23/30H	910	Yes	945	Yes	1120	Yes
8L23/30H	1040	Yes	1080	Yes	1280	Yes
[1] CW clockwise						

Table 1: Engine ratings for emission standard IMO Tier II.

Definition of engine ratings

General definition of diesel engine rating (acccording to ISO 15550: 2002; ISO 3046-1: 2002)

Reference conditions: ISO 3046-1: 2002; ISO 15550: 2002		
Air temperature T_r	K/°C	298/25
Air pressure p_r	kPa	100
Relative humidity Φr	%	30
Cooling water temperature upstream charge air cooler T_{cr}	K/°C	298/25

Table 2: Standard reference conditions.

2019-01-04 - en

Available outputs

	$P_{Application}$ Available output in percentage from ISO-Standard-Output	Fuel stop power (Blocking)	Max. allowed speed reduction at maximum torque [1]	Tropic conditions $t_r/t_{cr}/p_r$=100 kPa	Remarks
Kind of application	**(%)**	**(%)**	**(%)**	**(°C)**	
Electricity generation					
Auxiliary engines in ships	100	110	–	45/38	[2]
Marine main engines (with mechanical or diesel electric drive)					
Main drive generator	100	110	–	45/38	[2]

[1] Maximum torque given by available output and nominal speed.
[2] According to DIN ISO 8528-1 overload > 100% is permissible only for a short time to compensate frequency deviations. This additional engine output must not be used for the supply of electric consumers.

t_r – Air temperature at compressor inlet of turbocharger.
t_{cr} – Cooling water temperature before charge air cooler
p_r – Barometric pressure.

Table 3: Available outputs / related reference conditions.

$P_{Operating}$: Available output under local conditions and dependent on application.

Dependent on local conditions or special application demands, a further load reduction of $P_{Application, ISO}$ might be needed.

De-rating

1) No de-rating due to ambient conditions is needed as long as following conditions are not exceeded:

	No de-rating up to stated reference conditions (Tropic)	Special calculation needed if following values are exceeded
Air temperature before turbocharger T_x	≤ 318 K (45 °C)	333 K (60 °C)
Ambient pressure	≥ 100 kPa (1 bar)	90 kPa
Cooling water temperature inlet charge air cooler (LT-stage)	≤ 311 K (38 °C)	316 K (43 °C)
Intake pressure before compressor	≥ -20 mbar [1]	-40 mbar [1]
Exhaust gas back pressure after turbocharger	≤ 30 mbar [1]	60 mbar [1]
[1] Overpressure		

Table 4: De-rating – Limits of ambient conditions.

2019-01-04 - en

2) De-rating due to ambient conditions and negative intake pressure before compressor or exhaust gas back pressure after turbocharger.

$$a = \left[\left(\frac{318}{T_x + U + O}\right)^{1.2} \times \left(\frac{311}{T_{cx}}\right) \times 1.09 - 0.09\right]$$

with $a \leq 1$

$$P_{Operating} = P_{Application,\ ISO} \times a$$

a Correction factor for ambient conditions

T_x Air temperature before turbocharger [K] being considered ($T_x = 273 + t_x$)

U Increased negative intake pressure before compressor leeds to a de-rating, calculated as increased air temperature before turbocharger

U = (-20mbar – $p_{Air\ before\ compressor}$ [mbar]) x 0.25K/mbar

with $U \geq 0$

O Increased exhaust gas back pressure after turbocharger leads to a de-rating, calculated as increased air temperature before turbocharger:

O = ($P_{Exhaust\ after\ turbine}$ [mbar] – 30mbar) x 0.25K/mbar

with $O \geq 0$

T_{cx} Cooling water temperature inlet charge air cooler (LT-stage) [K] being considered ($T_{cx} = 273 + t_{cx}$)

T Temperature in Kelvin [K]

t Temperature in degree Celsius [°C]

3) De-rating due to special conditions or demands. Please contact MAN Energy Solutions, if:

- limits of ambient conditions mentioned in "*Table 4 De-rating – Limits of ambient conditions*" are exceeded
- higher requirements for the emission level exist
- special requirements of the plant for heat recovery exist
- special requirements on media temperatures of the engine exist
- any requirements of MAN Energy Solutions mentioned in the Project Guide can not be kept

2019-01-04 - en

This page is intentionally left blank

2019-01-04 - en

Power take-off (PTO)

Description

The engine can be supplied with a power take-off (PTO) in several positions, as an adapted extension to the crankshaft or alternator shaft.

The PTO is dimensioned to transmit the full engine power.

Between PTO and driven equipment there need to be selected a highly flexible coupling to transmit full engine power and to accommodate and absorb any vibrations which may be present radially and axially.

The PTO-arrangement for the driven equipment may only cause minimal axial force to the engine crankshaft. Any temperature expansion shall be avoided.

Crankshaft deflection may cause the flexible coupling between the crankshaft and the driven equipment to create an additional axial force, which must be taken into consideration when the PTO-arrangement is being designed.

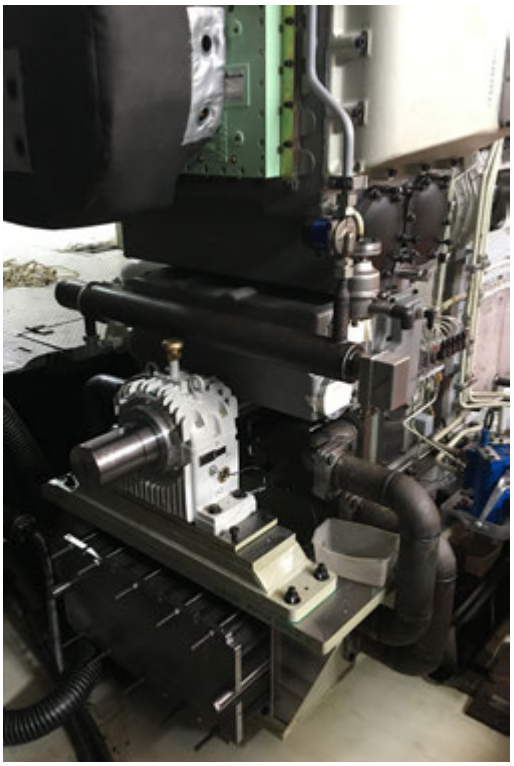

NOTICE

There need to be performed a full torsional vibration analysis for engine, PTO and driven equipment.

Please contact MAN Energy Solutions for support and assistance.

2025-03-19 - en

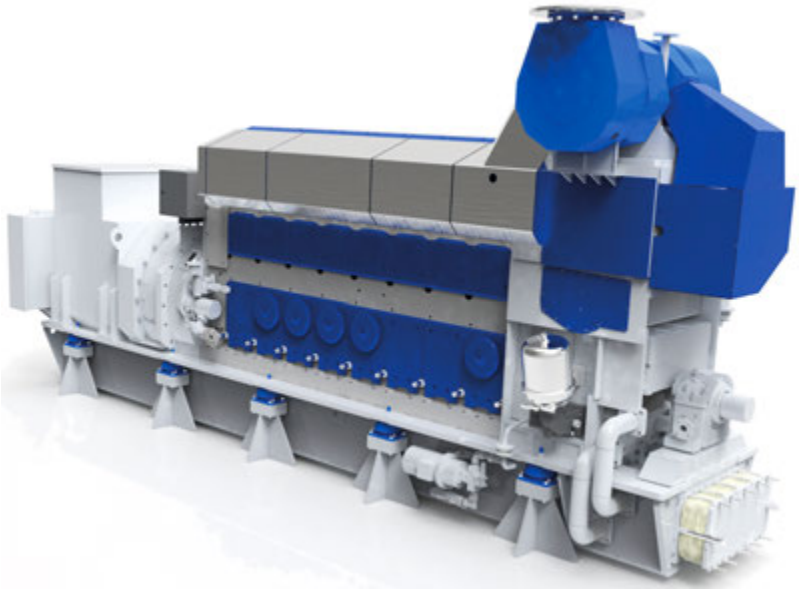

Figure 1: PTO on front end - external pump

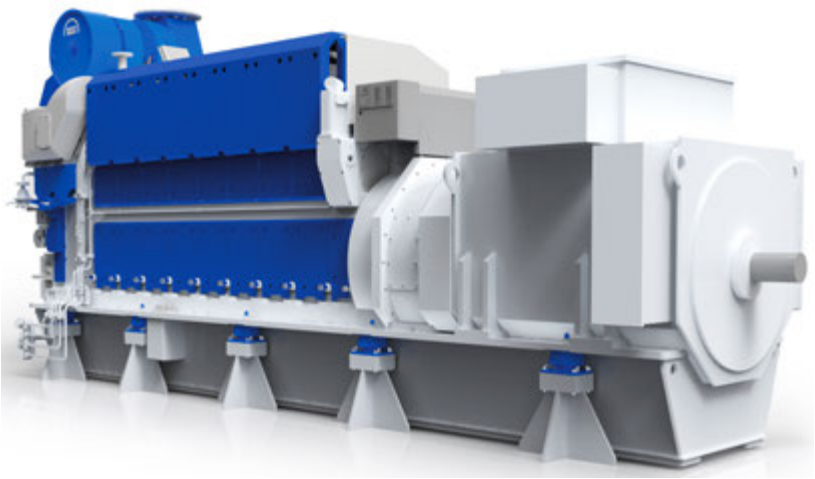

Figure 2: PTO on alternator - external pump

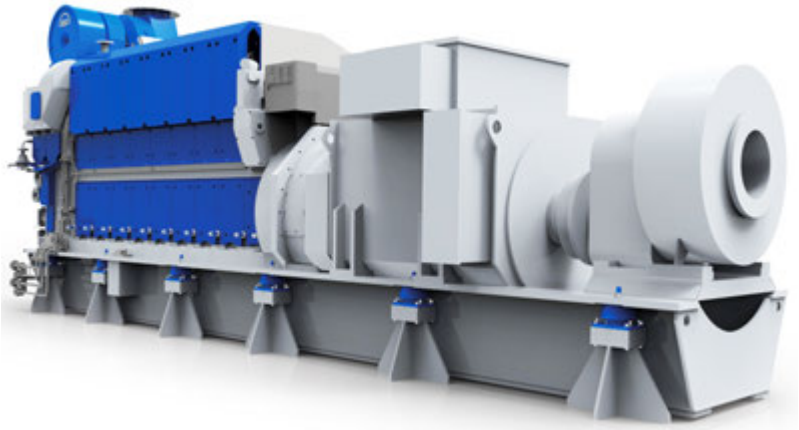

Figure 3: Pump on alternator - common base frame

2025-03-19 - en

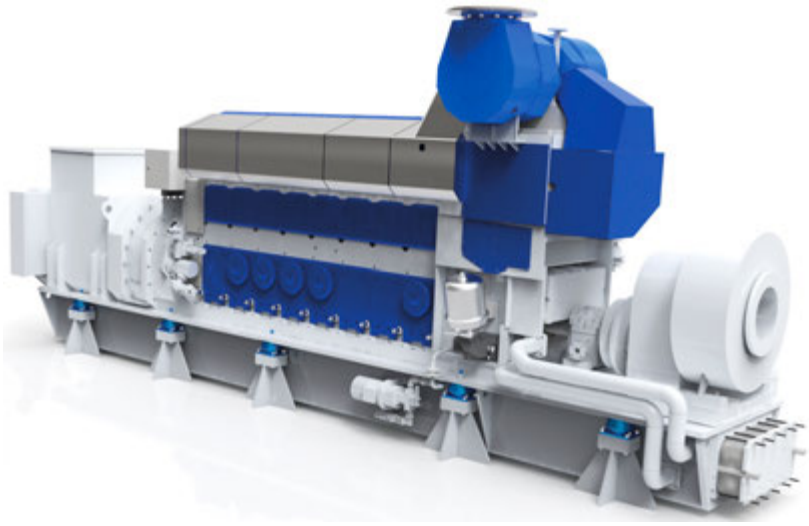

Figure 4: Pump on front end - common base frame

2025-03-19 - en

This page is intentionally left blank

2025-03-19 - en

General description

General

The engine is a turbocharged, single-acting, fourstroke diesel engine of the trunk piston type with a cylinder bore of 225 mm and a stroke of 300 mm, the crankshaft speed is 720, 750 or 900 rpm.

The engine can be delivered as an in-line engine with 5 to 8 cylinders.

Engine frame

The engine frame which is made of cast iron is a monobloc design incorporating the cylinder bloc, the crankcase and the supporting flanges.

The charge air receiver, the cooling water jackets and the housing for the camshaft and drive are also integral parts of this one-piece casting.

The main bearings for the underslung crankshaft are carried in heavy supports in the frame plating and are secured by bearing caps. To ensure strong and sturdy bedding of the caps, these are provided with side guides and held in place by means of studs with hydraulically tightened nuts. The main bearings are equipped with replaceable shells which are fitted without scraping.

The crankshaft guide bearing is located at the flywheel end of the engine.

On the sides of the frame there are covers for access to the camshaft, the charge air receiver and crankcase. Some of the covers are fitted with relief valves which will act, if oil vapours in the crankcase should be ignited, for instance in the event of a hot bearing.

Base frame

The engine and alternator are mounted on a common base frame. The rigid base frame construction can be embedded directly on the engine seating or flexibly mounted.

The engine part of the base frame acts as lubricating oil reservoir.

Cylinder liner

The cylinder liner is made of fine grained, pearlite cast iron and fitted in a bore in the engine frame. The liner is clamped by the cylinder head and is guided by a bore at the bottom of the cooling water space of the engine frame. The liner can thus expand freely downwards when heated during the running of the engine. Sealing for the cooling water is obtained by means of rubber rings which are fitted in grooves machined in the liner.

Cooling water is supplied at the bottom of the cooling water space between the liner and the engine frame and leaves through bores in the top of the frame to the cooling water jacket.

Top land ring

The top land ring is made of heat resistant steel, and is used to protect the cylinder liner from the heat generated by the combustion.

This way the liner will have a smaller wear rate, and less deformation.

2012-10-02 - en

Cylinder head

The cylinder head is of cast iron, made in one piece. It has a central bore for the fuel injection valve and bores for two exhaust valves, two inlet valves, indicator valve and cooling water.

The cylinder head is tightened by means of 4 nuts and 4 studs, which are screwed into the engine frame. The nuts are tightened by means of hydraulic jacks.

The cylinder head has a screwed-on coaming which encloses the valves. The coaming is closed with a top cover and thus provides an oil tight enclosure for the valve gear.

Air inlet and exhaust valves

The inlet and exhaust valve spindles are identical and therefore interchangeable.

The valve spindles are made of heat-resistant material and the spindle seats are armoured with welded-on hard metal.

All valve spindles are fitted with valve rotators which turn the spindles each time the valves are activated. The turning of the spindles is ensuring even temperature levels on the valve discs and prevents deposits on the seating surfaces.

The cylinder head is equipped with replaceable valve seat rings, which are directly water cooled in order to assure low valve temperatures.

The seat rings are made of heat-resistant steel. The seating surfaces are hardened in order to minimize wear and prevent dent marks, on the inlet seat by induction hardening, on the exhaust seat by hard metal armouring.

Valve actuating gear

The rocker arms are actuated through rollers, roller guides and push rods. The roller guides for fuel pump and for inlet and exhaust valves are mounted in one common housing for each cylinder. This housing is bolted to the engine frame.

Each rocker arm activates two spindles through a spring-loaded valve bridge with thrust screws and adjusting screws for valve clearance.

The valve actuating gear is pressure-feed lubricated from the centralized lubricating system of the engine. A non-return valve blocks the oil inlet to the rocker arms during prelubricating.

Fuel injection system

The engine is provided with one fuel injection pump, an injection valve, and a high pressure pipe for each cylinder.

The injection pump is mounted on the valve gear housing by means of two screws. The pump consists of a pump housing, a centrally placed pump barrel and a plunger. The pump is activated by the fuel cam, and the volume injected is controlled by turning the plunger.

2012-10-02 - en

The fuel injection valve is located in a valve sleeve in the center of the cylinder head. The opening of the valve is controlled by the fuel oil pressure, and the valve is closed by a spring.

The high pressure pipe which is led through a bore in the cylinder head is surrounded by a shielding tube.

The shielding tube has two holes in order to ensure that any leakage will be drained off to the cylinder head bore. The bore is equipped with drain channel and pipe.

The complete injection equipment inclusive injection pumps, high pressure and low pressure pipes is well enclosed behind removable covers.

Piston

The piston, which is oil-cooled and of the monobloc type made of nodular cast-iron, is equipped with 3 compression rings and 1 oil scraper ring.

By the use of compression rings with different barrelshaped profiles and chrome-plated running surfaces, the piston ring pack is optimized for maximum sealing effect and minimum wear rate.

The piston has a cooling oil space close to the piston crown and the piston ring zone. The heat transfer and thus the cooling effect is based on the shaker effect arising during the piston movement. The cooling medium is oil from the engine's lubricating oil system.

Oil is supplied to the cooling oil space through channels from the oil grooves in the piston pin bosses. Oil is drained from the cooling oil space through ducts situated diametrically to the inlet channels.

The piston pin is fully floating and kept in position in axial direction by two circlips (seeger rings). The piston pin is equipped with channels and holes for supply of oil to lubrication of the pin bosses and for supply of cooling oil to the piston.

Connecting rod

The connecting rod is die-forged. The big-end has an inclined joint in order to facilitate the piston and connecting rod assembly to be withdrawn up through the cylinder liner. The joint faces on connecting rod and bearing cap are serrated to ensure precise location and to prevent relative movement of the parts.

The connecting rod has bored channels for supply of oil from the big-end to the small-end.

The big-end bearing is of the trimetal type coated with a running layer.

The bearing shells are of the precision type and are therefore to be fitted without scraping or any other kind of adaption.

The small-end bearing is of trimetal type and is pressed into the connecting rod. The bush is equipped with an inner circumferential groove, and a pocket for distribution of oil in the bush itself and for supply of oil to the pin bosses.

2012-10-02 - en

Crankshaft and main bearings

The crankshaft, which is a one-piece forging, is suspended in underslung bearings. The main bearings are of the trimetal type, which are coated with a running layer. To attain a suitable bearing pressure and vibration level the crankshaft is provided with counterweights, which are attached to the crankshaft by means of two screws.

At the flywheel end the crankshaft is fitted with a gear wheel which through an intermediate wheel drives the camshaft.

Also fitted here is a coupling flange for connection of a generator. At the opposite end (front end) there is a claw-type coupling for the lub. oil pump or a flexible gear wheel connection for lub. oil and water pumps.

Lubricating oil for the main bearings is supplied through holes drilled in the engine frame. From the main bearings the oil passes through bores in the crankshaft to the big-end bearings and hence through channels in the connecting rods to lubricate the piston pins and cool the pistons.

Camshaft and camshaft drive

The inlet and exhaust valves as well as the fuel pumps of the engine are actuated by a camshaft. The camshaft is placed in the engine frame at the control side (left side, seen from the flywheel end).

The camshaft is driven by a gear wheel on the crankshaft through an intermediate wheel, and rotates at a speed which is half of that of the crankshaft.

The camshaft is located in bearing bushes which are fitted in bores in the engine frame. Each bearing is replaceable and locked in position in the engine frame by means of a locking screw.

A guidering mounted at the flywheel end guides the camshaft in the longitudinal direction.

Each section is equipped with fixed cams for operation of fuel pump, air inlet valve and exhaust valve.

The foremost section is equipped with a splined shaft coupling for driving the fuel oil feed pump (if mounted). The gear wheel for driving the camshaft as well as a gear wheel connection for the governor drive are screwed on to the aftmost section.

The lubricating oil pipes for the gear wheels are equipped with nozzles which are adjusted to apply the oil at the points where the gear wheels are in mesh.

Governor

The engine speed is controlled by a hydraulic or electric governor.

Monitoring and control system

All media systems are equipped with thermometers and manometers for local reading and for the most essential pressures the manometers are together with tachometers centralized in an engine-mounted instruments panel.

The number of and type of parameters to have alarm function are chosen in accordance with the requirements from the classification societies.

2012-10-02 - en

The engine has as standard shutdown functions for lubricating oil pressure low, cooling water temperature high and for overspeed.

Turbocharger system

The turbocharger system of the engine, which is a constant pressure system, consists of an exhaust gas receiver, a turbocharger, a charging air cooler and a charging air receiver, the latter being intergrated in the engine frame.

The turbine wheel of the turbocharger is driven by the engine exhaust gas, and the turbine wheel drives the turbocharger compressor, which is mounted on the common shaft. The compressor draws air from the engine room, through the air filters.

The turbocharger presses the air through the charging air cooler to the charging air receiver. From the charging air receiver, the air flows to each cylinder, through the inlet valves.

The charging air cooler is a compact tube-type cooler with a large cooling surface. The cooling water is passed twice through the cooler, the end covers being designed with partitions which cause the cooling water to turn.

The cooling water tubes are fixed to the tube plates by expansion.

From the exhaust valves, the exhaust is led through a water cooled intermediate piece to the exhaust gas receiver where the pulsatory pressure from the individual exhaust valves is equalized and passed to the turbocharger as a constant pressure, and further to the exhaust outlet and silencer arrangement.

The exhaust gas receiver is made of pipe sections, one for each cylinder, connected to each other, by means of compensators, to prevent excessive stress in the pipes due to heat expansion.

In the cooled intermediate piece a thermometer for reading the exhaust gas temperature is fitted and there is also possibility of fitting a sensor for remote reading.

To avoid excessive thermal loss and to ensure a reasonably low surface temperature the exhaust gas receiver is insulated.

Compressed air system

The engine is started by means of a built-on air starter.

The compressed air system comprises a main starting valve, an air strainer, a remote controlled starting valve and an emergency starting valve which will make it possible to start the engine in case of a power failure.

Fuel oil system

The built-on fuel oil system consists of the fuel oil filter and the fuel injection system. An engine-driven fuel oil feed pump can be mounted as optional.

The fuel oil feed pump, which is of the gear pump type, is mounted to the front end of the engine frame and driven by the camshaft through a splined shaft coupling. The pump housing is equipped with a spring-loaded adjustable by-pass valve.

The fuel oil filter is a duplex filter. The filter is equipped with a three-way cock for single or double operation of the filters.

2012-10-02 - en

Waste oil and fuel oil leakage is led to a leakage alarm which is heated by means of fuel return oil.

Internal nozzle cooling system

The nozzles of the injection valves on HFO-engines are temperature controlled by means of a separate circuit containing diesel oil or thermal oil as media.

The system maintains a nozzle surface temperature low enough to prevent formation of carbon trumpets on the nozzle tips during high load operation and high enough to avoid cold corrosion during idling or low-load operation.

Lubricating oil system

All moving parts of the engine are lubricated with oil circulating under pressure.

The lubricating oil pump is of the gear wheel type with built-in pressure control valve. The pump draws the oil from the sump in the base frame, and on the pressure side the oil passes through the lubricating oil cooler and the filter which both are mounted on the engine.

Cooling is carried out by the low temperature cooling water system and the temperature regulating is made by a thermostatic 3-way valve on the oil side.

The engine is as standard equipped with an electrically driven prelubricating pump.

Cooling water system

The cooling water system consists of a low temperature system and a high temperature system.

The water in the low temperature system is passed through the charge air cooler and the lubricating oil cooler, and the alternator if the latter is water cooled.

The low temperature system is normally cooled by fresh water.

The high temperature cooling water system cools the engine cylinders and the cylinder head. The high temperature system is always cooled by fresh water.

Tools

The engine can be delivered with all necessary tools for the overhaul of each specific plant. Most of the tools can be arranged on steel plate panels.

2012-10-02 - en

Cross section

Cross section

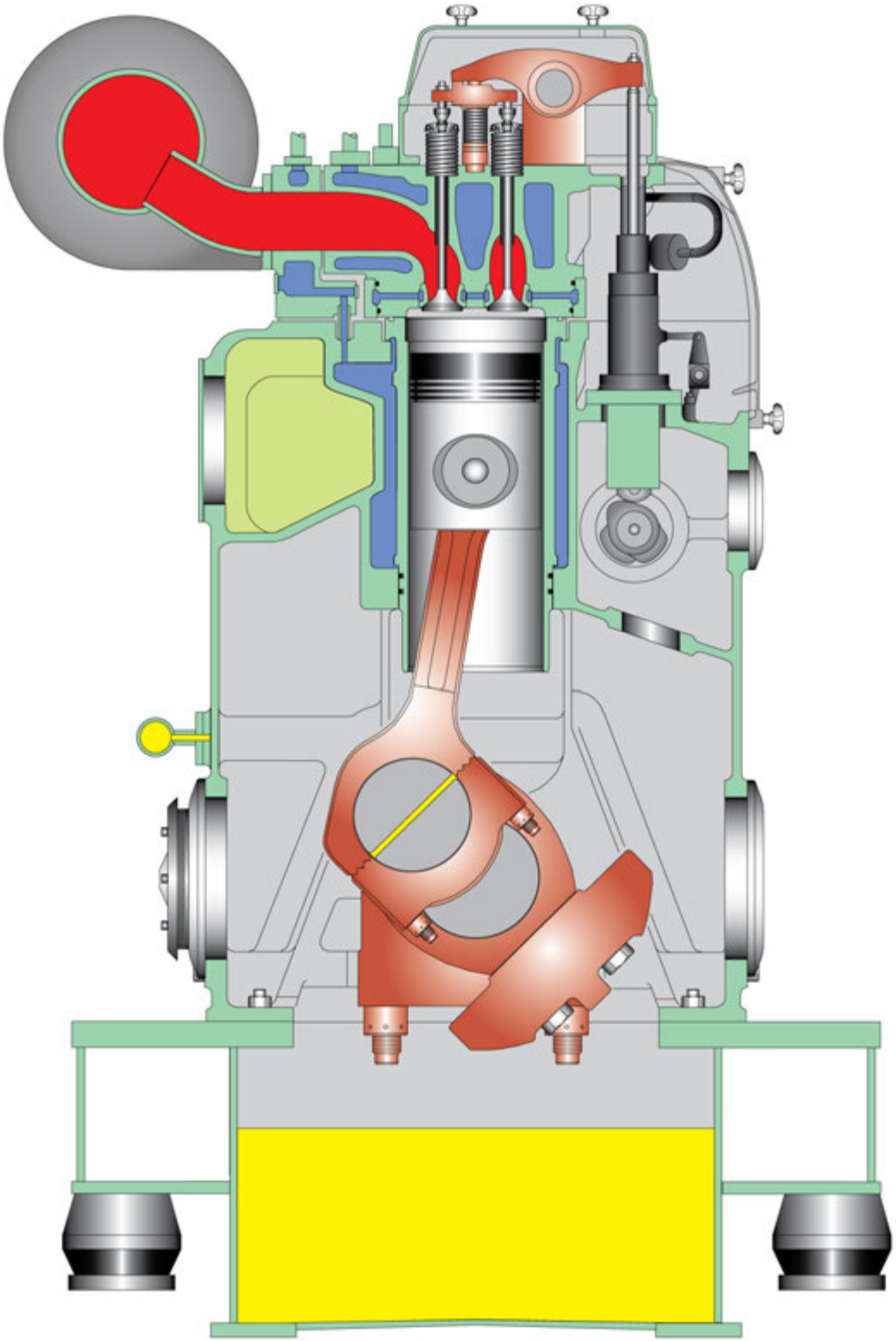

2021-12-10 - en

This page is intentionally left blank

2021-12-10 - en

Main particulars

Main particulars

Cycle	:	4-stroke
Configuration	:	In-line
Cyl. nos available	:	5 - 6 - 7 - 8
Power range	:	650 - 1280 kW
Speed	:	720 / 750 / 900 rpm
Bore	:	225 mm
Stroke	:	300 mm
Stroke/bore ratio	:	1.33 : 1
Piston area per cyl.	:	398 cm^2
swept volume per cyl.	:	11.9 ltr
Compression ratio	:	13.5 : 1
Max. combustion pressure	:	130 bar *
Turbocharging principle	:	Constant pressure system and intercooling
Fuel quality acceptance	:	HFO (up to 700 cSt/50º C, RMK700) MDO (DMB) - MGO (DMA, DMZ) according ISO8217-2010

* For L23/30H-900 rpm version a pressure of 135 bar measured at the indicator cock correspond to 130 bar in the combustion chamber

Power lay-out		**MCR version**		
Speed	rpm	720	750	900
Mean piston speed	m/sec.	7.2	7.5	9.0
Mean effective pressure	bar	18.2	18.1	17.9
Max. combustion pressure	bar	130	130	130*
Power per cylinder	kW per cyl.	130	135	160

Overload rating (up to 10 %) allowable in 1 hour for every 12 hours				
Power per cylinder	kW per cyl.	145	150	175

Firing order

5 cyl. engine	1	2	4	5	3			
6 cyl. engine	1	4	2	6	3	5		
7 cyl. engine	1	2	4	6	7	5	3	
8 cyl. engine	1	2	4	6	8	7	5	3

2023-02-08 - en

This page is intentionally left blank

2023-02-08 - en

Dimensions and weights

General

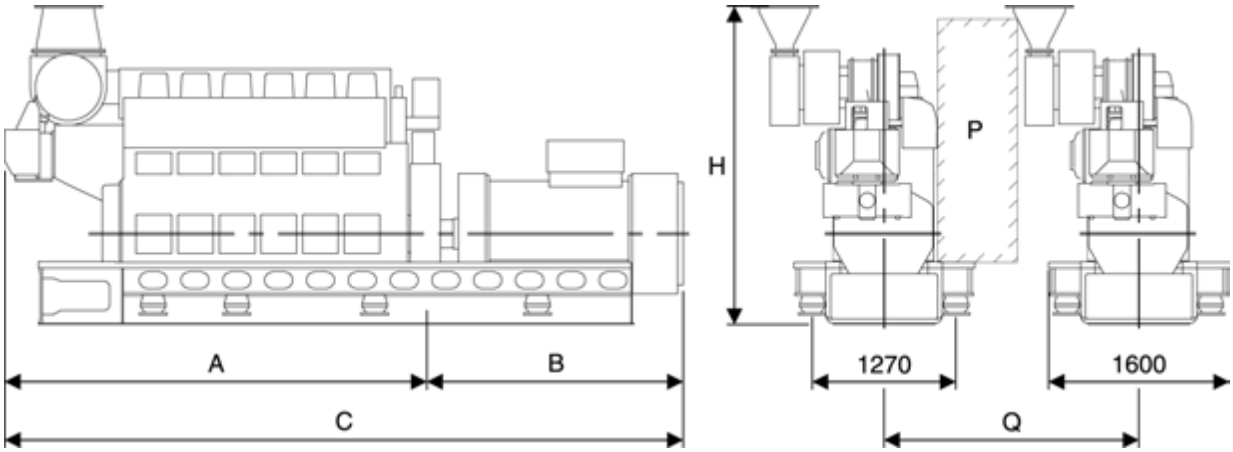

Cyl. no	A (mm)	* B (mm)	* C (mm)	H (mm)	** Dry weight GenSet (t)
5 (720 rpm)	3369	2155	5524	2383	18.0
5 (750 rpm)	3369	2155	5524	2383	17.6
6 (720 rpm)	3738	2265	6004	2383	19.7
6 (750 rpm)	3738	2265	6004	2383	19.7
6 (900 rpm)	3738	2265	6004	2815	21.0
7 (720 rpm)	4109	2395	6504	2815	21.4
7 (750 rpm)	4109	2395	6504	2815	21.4
7 (900 rpm)	4109	2395	6504	2815	22.8
8 (720 rpm)	4475	2480	6959	2815	23.5
8 (750 rpm)	4475	2480	6959	2815	22.9
8 (900 rpm)	4475	2340	6815	2815	24.5

P Free passage between the engines, width 600 mm and height 2000 mm
Q Min. distance between engines: 2250 mm.

* Depending on alternator
** Weight included a standard alternator

All dimensions and masses are approximate, and subject to changes without prior notice.

2012-10-03 - en

This page is intentionally left blank

2012-10-03 - en

Centre of gravity

Description

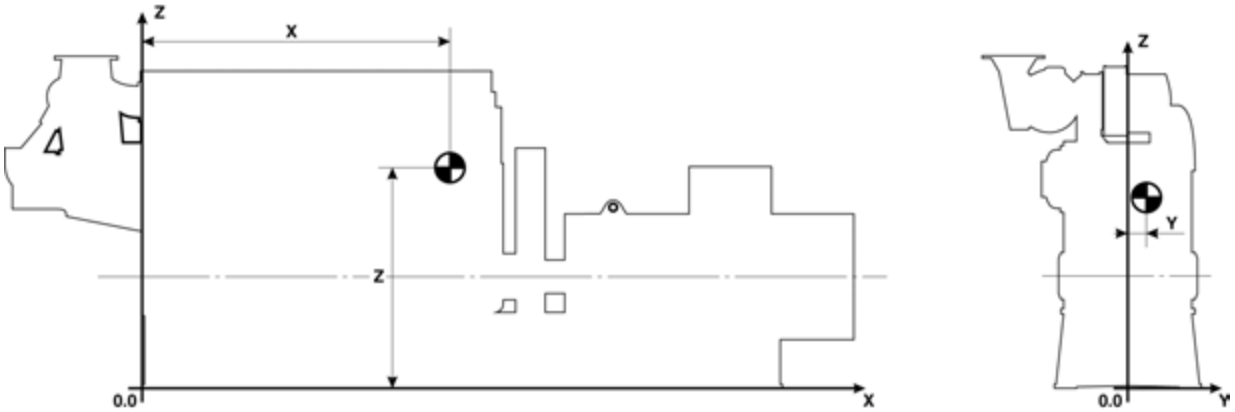

	X - mm	Y - mm	Z - mm
5 cyl. engine	1740	0	845
6 cyl. engine	2105	0	845
7 cyl. engine	2245	0	845
8 cyl. engine	2445	0	845

The values are based on generator make A. van Kaick. If another generator is chosen the values will change.

2014-05-21 - en

This page is intentionally left blank

2014-05-21 - en

Overhaul areas

Dismantling height for piston

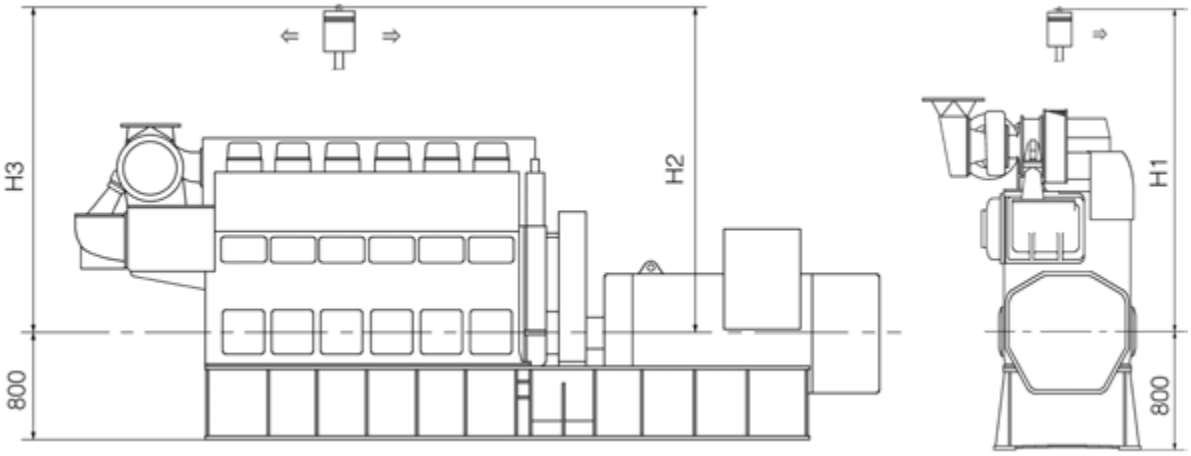

Figure 1: Dismantling height for piston.

Engine type	Frame (H1)	Cylinder head (H2)	Turbocharger (H3)
5-6L23/30H (720/750 rpm)	1919	2398	2453
7-8L23/30H (720/750 rpm)	1919	2398	2553
6-7-8L23/30H (900 rpm)	1919	2398	2553

H1:
For dismantling of piston and connecting rod at the camshaft side.

H2:
For dismantling of piston and connecting rod passing the alternator. (Remaining cover not removed).

H3:
For dismantling of piston and connecting rod passing the turbocharger.

If lower dismantling height is required, special tools can be delivered. *See also B 10 01 1, Low dismantling height.*

2020-11-12 - en

Dismantling space

It must be considered that there is sufficient space for pulling the charge air cooler element, air filter on the turbocharger, lubricating oil cooler, lubricating oil filter cartridge and bracing bolt.

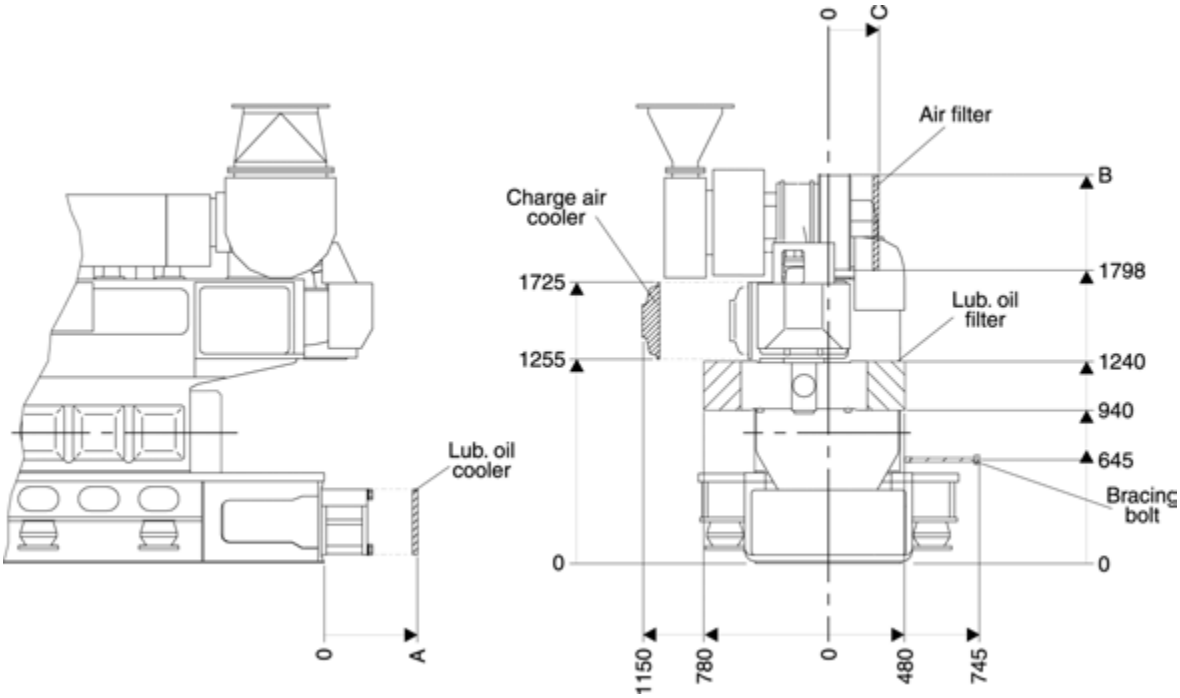

Figure 2: Overhaul areas for charge air cooler element, turbocharger filter element, lub. oil cooler, lub. oil filter cartridge and bracing bolt.

Cyl.		A	B	C
5	720/750 rpm	1270	2299	58.5
6	720/750 rpm	1270	2299	58.5
6	900 rpm	1270	2388	226
7	720/750 rpm	1270	2388	226
7	900 rpm	1420	2388	226
8	720/750 prm	1270	2388	226
8	900 rpm	1620	2388	226

Table 1: Definition of point of measurement in figure 2.

2020-11-12 - en

Low dismantling height

Space requirements

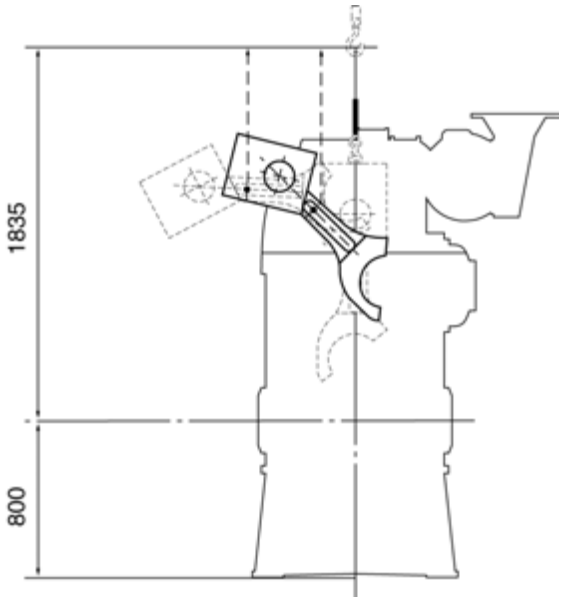

Figure 1: Minimum dismantling height of pistons only with special tools.

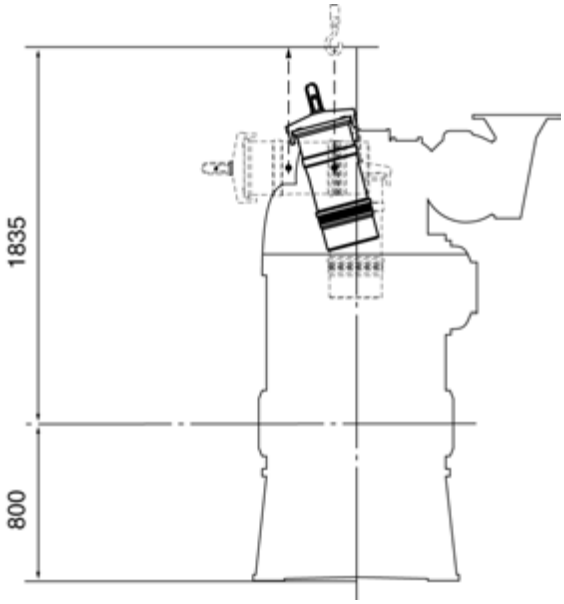

Figure 2: Minimum lifting height of cylinder liner only with special tools.

2014-05-21 - en

This page is intentionally left blank

2014-05-21 - en

Engine rotation clockwise

Engine rotation clockwise

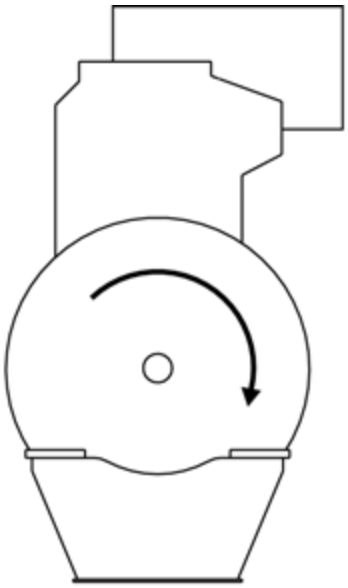

Direction of rotation seen from flywheel end "Clockwise"

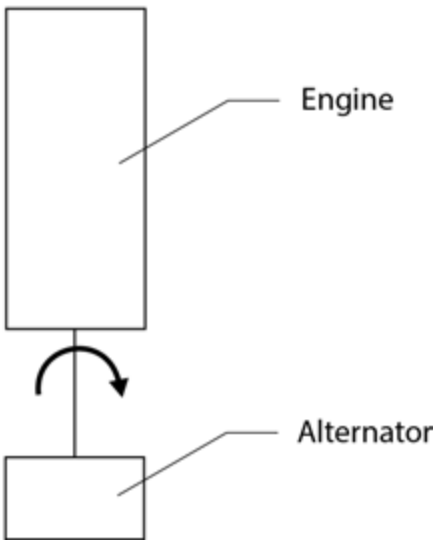

2025-03-19 - en

This page is intentionally left blank

Internal fuel oil system

Internal fuel oil system

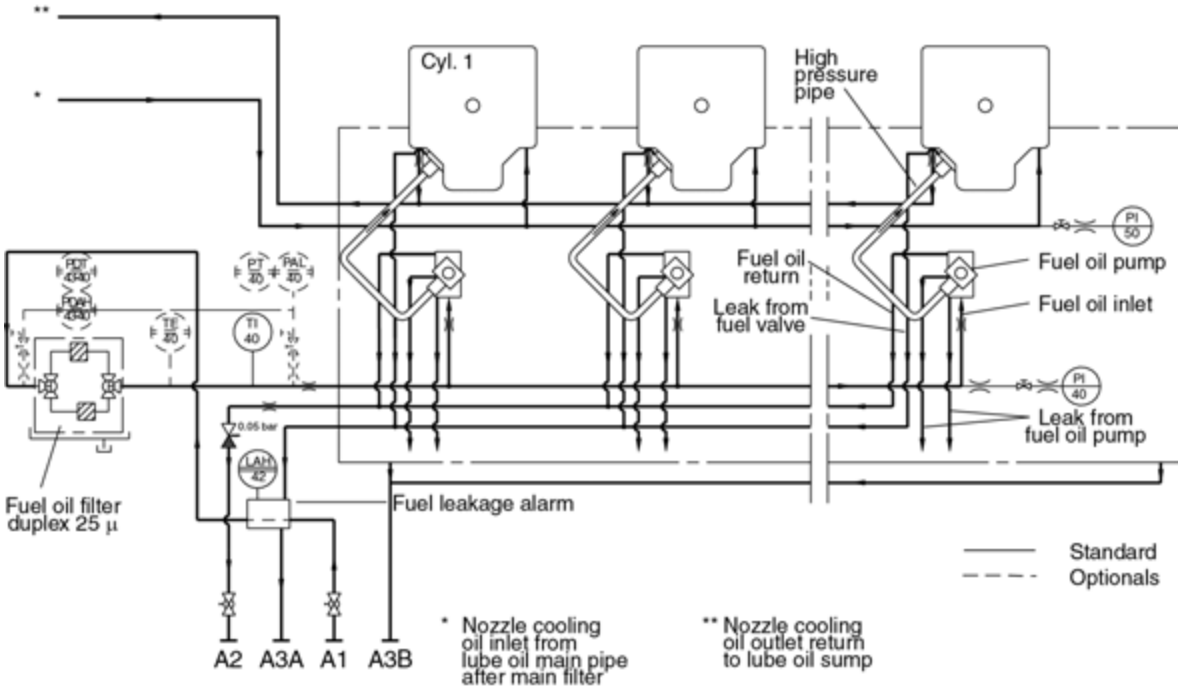

Figure 1: Diagram for fuel oil system (only for guidance, please see the plant specific engine diagram)

Pipe description		
A3A	Clean leak oil outlet to service tank	DN15
A3B	Waste oil outlet to drain tank	DN15
A1	Fuel oil inlet	DN20
A2	Fuel oil outlet	DN20

Table 1: Flange connections are as standard according to DIN 2501

General

The internal built-on fuel oil system as shown in fig 1 consists of the following parts:

- the high-pressure injection equipment
- an internal nozzle cooling system
- a waste oil system

Fuel oil filter duplex (Safety filter)

GenSets with conventional fuel injection system or common rail fuel systems are equipped with a fuel oil filter duplex, with a fineness of max. 25 microns (sphere passing mesh) The fuel oil filter duplex is with star-pleated filter elements and allows change-over during operation without pressure-loss. The fil-

2014-10-16 - en

ter is compact and easy to maintain, requiring only manual cleaning when maximum allowable pressure drop is reached. When maximum pressure drop is reached the standby filter chamber is brought on line simultaneously as the dirty one is isolated by means of the change-over valve. After venting, the dirty element can be removed, cleaned and refilled to be the standby filter chamber.

Fuel injection equipment

Each cylinder unit has its own set of injection equipment, comprising injection pump, high-pressure pipe and injection valve.

The injection equipment and the distribution supply pipes are housed in a fully enclosed compartment thus minimizing heat losses from the preheated fuel.

This arrangement reduces external surface temperatures and the risk of fire caused by fuel leakage.

Fuel oil injection pump

The fuel oil injection pump is installed on the roller guide housing directly above the camshaft, and it is activated by the cam on the camshaft through roller guides fitted in the roller guide housing.

The injection amount of the pump is regulated by transversal displacement of a toothed rack in the side of the pump housing.

By means of a gear ring, the pump plunger with the two helical millings, the cutting-off edges, is turned. Hereby the length of the pump stroke is specified when the plunger closes the inlet holes until the cutting-off edges again uncover the holes.

The release of high pressure through the cutting-off edges presses the oil with great force against the wall of the pump housing. At the spot, two exchangeable plug screws are mounted.

The amount of fuel injected into each cylinder unit is adjusted by means of the governor.

It maintains the engine speed at the preset value by a continuous positioning of the fuel pump racks, via a common regulating shaft and spring-loaded linkages for each pump.

The injection valve is for "deep" building-in to the centre of the cylinder head.

Fuel oil injection valve

The joint surface between the nozzle and holder is machine-lapped to make it oil-tight.

The fuel injector is mounted in the cylinder head by means of the integral flange in the holder and two studs with distance pieces and nuts.

A bore in the cylinder head vents the space below the bottom rubber sealing ring on the injection valve, thus preventing any pressure build-up due to gas leakage, but also unveiling any malfunction of the bottom rubber sealing ring for leak oil.

2014-10-16 - en

Fuel oil high pressure pipe

The high-pressure pipe between fuel injection pump and fuel injector is a shielded pipe with coned pipe ends for attachment by means of a union nut, and a nipple nut, respectively.

The high-pressure pipe is led through a bore in the cylinder head, in which it is surrounded by a shielding tube, also acting as union nut for attachment of the pipe end to the fuel injector.

The shielding tube has two holes in order to ensure that any leakage will be drained off to the cylinder head bore. The bore is equipped with drain channel and pipe.

The shielding tube is supported by a sleeve, mounted in the bore with screws.

The sleeve is equipped with O-rings in order to seal the cylinder head bore.

Internal nozzle cooling system

The nozzles of the injection valves on HFO-engines are temperature controlled by means of a circuit from the engines lubricating oil system.

The system maintains a nozzle surface temperature low enough to prevent formation of carbon trumpets on the nozzle tips during high load operation and high enough to avoid cold corrosion during idling or low-load operation.

Waste oil system

Clean leak oil from the fuel injection valves, fuel injection pumps and high-pressure pipes, is led to the fuel leakage alarm unit, from which it is drained into the clean leak fuel oil tank.

The leakage alarm unit consists of a box, with a float switch for level monitoring. In case of a leakage, larger than normal, the float switch will initiate an alarm. The supply fuel oil to the engine is led through the leakage alarm unit in order to keep this heated up, thereby ensuring free drainage passage even for high-viscous waste/leak oil.

Waste and leak oil from the hot box is drained into the sludge tank.

Clean leak fuel tank

Clean leak fuel is drained by gravity from the engine. The fuel should be collected in a separate clean leak fuel tank, from where it can be pumped to the service tank and reused without separation. The pipes from the engine to the clean leak fuel tank should be arranged continuously sloping. The tank and the pipes must be heated and insulated, unless the installation is designed for operation exclusively on MDO/MGO.

The leak fuel piping should be fully closed to prevent dirt from entering the system.

Sludge tank

In normal operation no fuel should leak out from the components of the fuel system. In connection with maintenance, or due to unforeseen leaks, fuel or water may spill in the hot box of the engine. The spilled liquids are collected and drained by gravity from the engine through the dirty fuel connection.

Waste and leak oil from the hot box is drained into the sludge tank.

2014-10-16 - en

The tank and the pipes must be heated and insulated, unless the installation is designed for operation exclusively on MDO/MGO.

Optionals

Besides the standard components, the following standard optionals can be built-on:

- Pressure differential alarm high
  - PDAH 43-40 Fuel oil, inlet and outlet filter
- Pressure differential transmitting
  - PDT 43-40 Fuel oil, inlet and outlet filter
- Pressure alarm low
  - PAL 40 Fuel oil, inlet fuel oil pump
- Pressure transmitting
  - PT40 Fuel oil, inlet fuel oil pump
- Temperature element
  - TE40 Fuel oil, inlet fuel oil pump

Data

For pump capacities, see "*D 10 05 0 List of capacities*"

Fuel oil consumption for emissions standard is stated in "*B 11 01 0 Fuel oil consumption for emissions standard*"

Set points and operating levels for temperature and pressure are stated in "*B 19 00 0 operation data & set points*"

2014-10-16 - en

Fuel application

General

In general our GenSets and Propulsion engines are developed for continuous operation at maximum rating on MDO/MGO and HFO.

In case of low load operation it is recommended to switch the engine to MDO/MGO; as there are no load limitations for operation on MDO/MGO.

The applied fuel must comply with the quality requirements specified in the current edition of ISO 8217.

Marine fuels, which fully meet requirements and purchase specifications of ISO 8217:2017, will still require treatment before they meet the requirements for the engine.

Biofuels / non-standardized fuels

Non-standardized fuels are fuels that are not based on mineral oil or comply with ISO 8217, and fuels that contain larger proportions of biofuel (fatty acid methyl ester). Such biofuel components are typically produced from oil ferrous plants or used cooking oil. Residues from biofuel production can also be included.

Before application of biofuels / non-standard fuels please contact MAN Energy Solutions in order to obtain guidelines for operation with the actual fuel.

Engine operation

Occasional changes in operation mode between the fuel types complying with ISO 8217 are considered to be within normal operation procedures for our engine types, and do thus not require special precautions.

Low viscosity fuels

In order to avoid seizure of the fuel oil injection pump components the viscosity at engine fuel oil inlet must be > 2 cSt. In order achieve this it may be necessary to install a fuel oil cooler, when the engine is running on MGO. This is to ensure correct viscosity and to avoid heating of the service tank, which is important as the fuel oil injection pumps are cooled by the fuel.

When operating on MDO/MGO, a larger leak oil amount must be expected from the fuel oil injection pumps and fuel oil injection valves compared to operation on HFO.

Selection of the lubricating oil is similar to HFO. For temporary operation on distillate fuels including low Sulphur distillates, nothing has to be considered. A lubricating oil suitable for operation on diesel fuel is only to be selected if a distillate fuel is used continuously.

2025-03-19 - en

This page is intentionally left blank

2025-03-19 - en

Setting the heavy fuel oil supply system

General information

The specified flow rate of fuel oil (FO) through the engines is essential for them to function reliably. If the minimum flow is not reached for each engine, problems such as stuck fuel injection pumps may result. The reason for this is that an inadequate flow rate deteriorates the cooling and lubrication properties of fuel, leading to laquering and seizing during HFO operation, or seizing alone in MDO/MGO operation.

It is important to remember that even if plant-related fuel pumps are correctly designed as per the project guide, this does not guarantee the minimum flow through each engine. The entire fuel oil system must be commissioned carefully, as even a single incorrectly adjusted valve can hinder fuel flow through the engines. The system diagram shown should be regarded as an example of the system setting. The relevant requirements for the engine type are set out in the pertinent project guide.

Based on the MAN Diesel & Turbo uni-fuel system, this guideline explains how the correct setting is performed and how each engine is supplied with its required fuel flow and pressure, as set out in the project specification for reliable operation. This guideline can also be applied to fuel systems for GenSets alone, without MDT two-stroke engines. It applies to MAN Diesel & Turbo marine GenSets with a conventional injection system.

Preliminary work (precondition)

- The main engine is connected to the fuel system (Uni-concept fuel system).
- Check whether the flow rates of the booster and supply pump correspond to the specifications in the planning documentation.
- Attach or install an ultrasonic flowmeter (FM) which is suitable for pipe diameters of DN15 and larger.
- The entire heavy oil supply system (HFO main system and a separate MDO system) must be flushed according to the work instructions “Operating Fluid Systems - flushing and cleaning;” see Volume 010.005 Engine – Work Instructions 010.000.001-01 and 000.03.
- After flushing, be sure to remove the run-in filters.
- Clean all fuel filters for GenSets and the main engine.
- The shut-off valve (1) via the inlet and outlet of the main engine is closed. (It is opened only during maintenance of the main engine. Otherwise, undesired interference can occur with the internal pressure relief valve of the main engine).
- If the main engine cannot be connected to the fuel oil system at this time of commissioning, the shut-off valve (1) is open and the pressure relief valve (2) must be set to at least 10 bar.
- GenSets must be connected to the main HFO fuel oil system (Check all V1 and V2 changeover valves).
- The main engine and all GenSets are in standby mode (i.e. are not running).

Setting the heavy fuel oil supply system

2020-05-18 - de

Setting the heavy fuel oil supply system

Setting procedure for the heavy oil system

To supply the main engine and all GenSets with sufficient fuel pressure and flow, four steps have to be executed. The following drawing shows components of the system which are set in the corresponding steps.

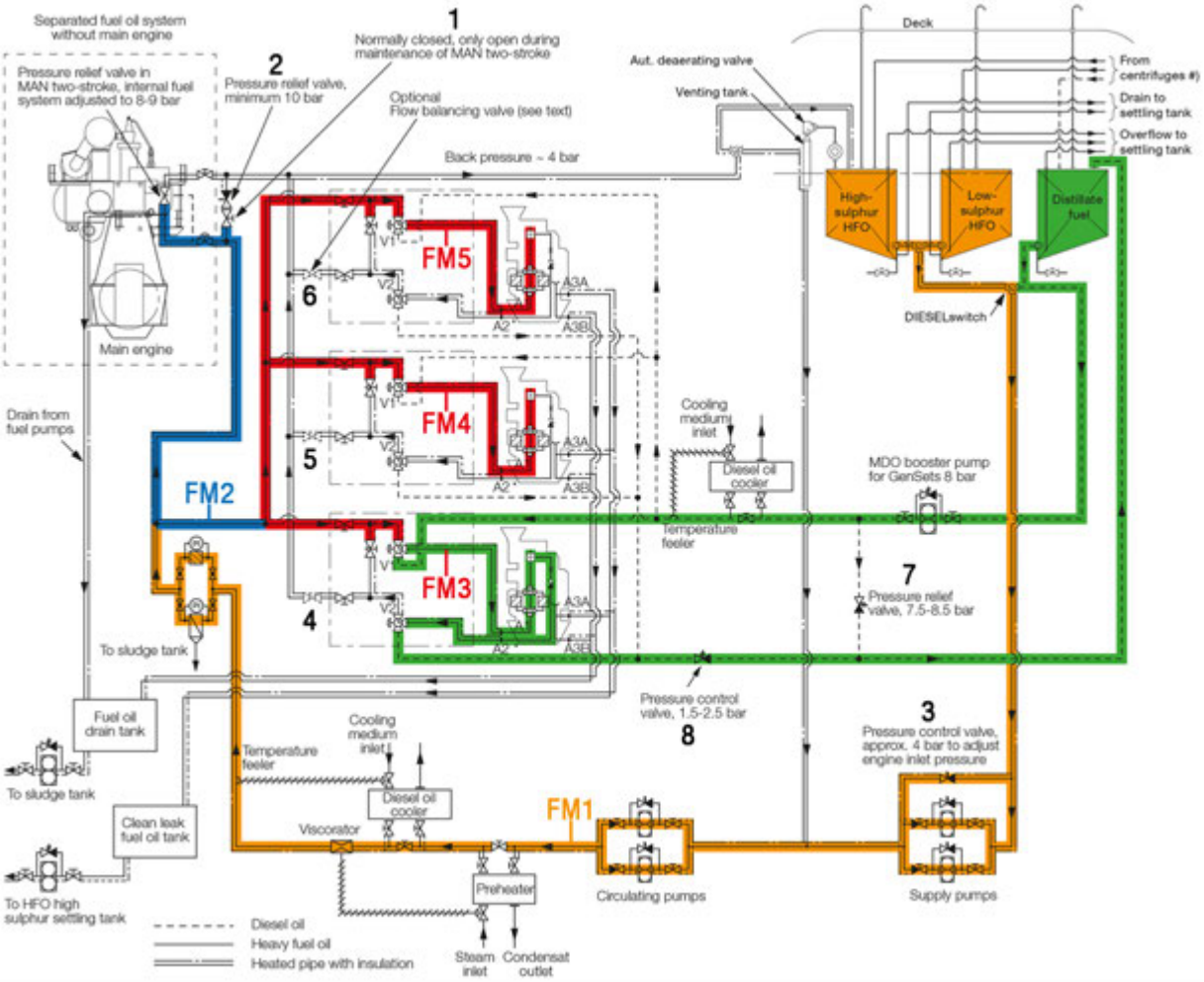

FM1 Flow rate of circulation pumps
FM2 Flow distribution between main engine and GenSets
FM3 Flow rate at GenSets in MDO cycle
FM4 Flow distribution between GenSets (recommendation)
FM5 Flow distribution between GenSets (recommendation)

Flow rate and pressure of circulating and supply pumps

Aim: To achieve the required flow rate and pressure at the outlet of circulating and supply pumps

Procedure

- Check whether the opening differential pressure of the safety valves on the circulating and supply pump is adjusted according to the pump manufacturer's specifications and whether the valves remain shut during normal operation.
- Set the correct pressure at fuel oil inlet of the main engine by setting the pressure control valve (3) parallel to the supply pump (set point approx. 4 bars). This results in a counter-pressure also amounting to approx. 4 bar in the main engine fuel outlet.

2020-05-18 - de

- At “FM1,” measure whether the flow rate downstream of the booster pump is in accordance with the planning documentation.

NOTICE

Safety valves

The safety valves of the circulating and supply pump are exclusively intended as safety devices for the pumps in which they are installed. The safety valves of the booster and supply pump must not be used to set the system or pump supply pressure.

Flow distribution between main engine and GenSets

Aim: To reach the required flow distribution between GenSets and main engine

Applies to the Uni concept only.

Procedure

- Check whether the flow rate to “FM2” after splitting the FO pipeline into a branch to the main engine and another to the GenSets reaches the minimum fuel flow rate for all GenSets, as stipulated in the Project Guide.
- An inadequate pressure loss can be caused by insufficient pipe dimensioning, a long pipe length, soiled filters, clogging in the pipeline, an incorrectly adjusted internal overpressure valve of the main engine etc.

NOTICE

FO system without an MDT main engine

When a FO system is to be set without an MDT main engine, a pressure relief valve similar to the valve (2) is installed in the system to divert excess fuel away when an engine is disconnected from the system. Ensure that the valve is set to a differential pressure of at least 10 bar.

Flow distribution between GenSets

Aim: To achieve a sufficient flow for each GenSet

This step is compulsory for 32/40 engines. For the other GenSets, this step is recommended if they still have a non-uniform flow distribution after the above steps have been performed, and if the minimum fuel flow as specified in the project manual cannot be achieved at all GenSets. This can occur if the pipe diameter is too small, pipe lengths between GenSets are too long or the recirculation pumps are too small for the intended purpose.

Preconditions for adjustment

- Installation of flow balancing valves downstream of each engine.

Procedure

- Flow measurement at the fuel inlet of the GenSet (preferably as far as possible from heavy oil pumps, e.g. at “FM3”).
- If the flow rate at “FM3” is too high, gradually close the flow balancing valve (4) until the required flow rate is reached.
- Continue with the next GenSet if the flow rate at “FM3” is too low.
- If the flow rate at “FM4” is too high, close the flow balancing valve (5) until the required flow rate is reached.
- Continue with the next GenSet again if the flow rate at “FM4” is too low.
- If the flow rate at “FM5” is too high, close the flow balancing valve (6) until the required flow rate is reached.

Setting the heavy fuel oil supply system

2020-05-18 - de

- Then, start working at “FM3” again and repeat this procedure until each GenSet reaches its respective minimum flow rate.
- If the inlet pressure on a GenSet becomes too high during this procedure, open the pressure control valve (3) until the required pressure is reached again.

Setting procedure for the MDO fuel circuit

Aim: To achieve a sufficient flow rate for each GenSet in the MDO circuit

This circuit is intended for diesel operation.

Preconditions for adjustment

- Check how many GenSets the MDO pump can supply with the required flow rate. Please note that an insufficient supply flow rate in the MDO circuit may result in seizures.
- Switch the switch-over valves “V1” and “V2” to MDO mode for the maximum number of GenSets to be supplied at the same time.
- If available, adjust the flow distribution between GenSets. (See the steps pertaining to Flow Distribution between GenSets.)

Procedure: Pressure adjustment

- If the pressure at the engine inlet is too low, close the pressure relief valve (7) connecting the inlet and outlet of the MDO circuit to one another until the required pressure is reached or the inlet pressure is no longer affected.
- If the required pressure cannot be reached by turning the pressure relief valve (7) towards the closed position, the pressure control valve (8) at the outlet of the MDO circuit must be closed until the required pressure is reached.
- Otherwise, if the pressure at the engine inlet is too high, open the pressure control valve (8) until the required pressure is reached.

Procedure: Flow setting

- Flow measurement at the fuel inlet of the corresponding GenSet (“FM3” to “FM5”).
- If the flow rate through the engine is too low, close the pressure relief valve (7) until the required pressure is reached.
- If the incoming pressure becomes too high, open the pressure control valve (8) until the required pressure is reached again.

Setting the heavy fuel oil supply system

2020-05-18 - de

Fuel oil system

Fuel oil system with drain split

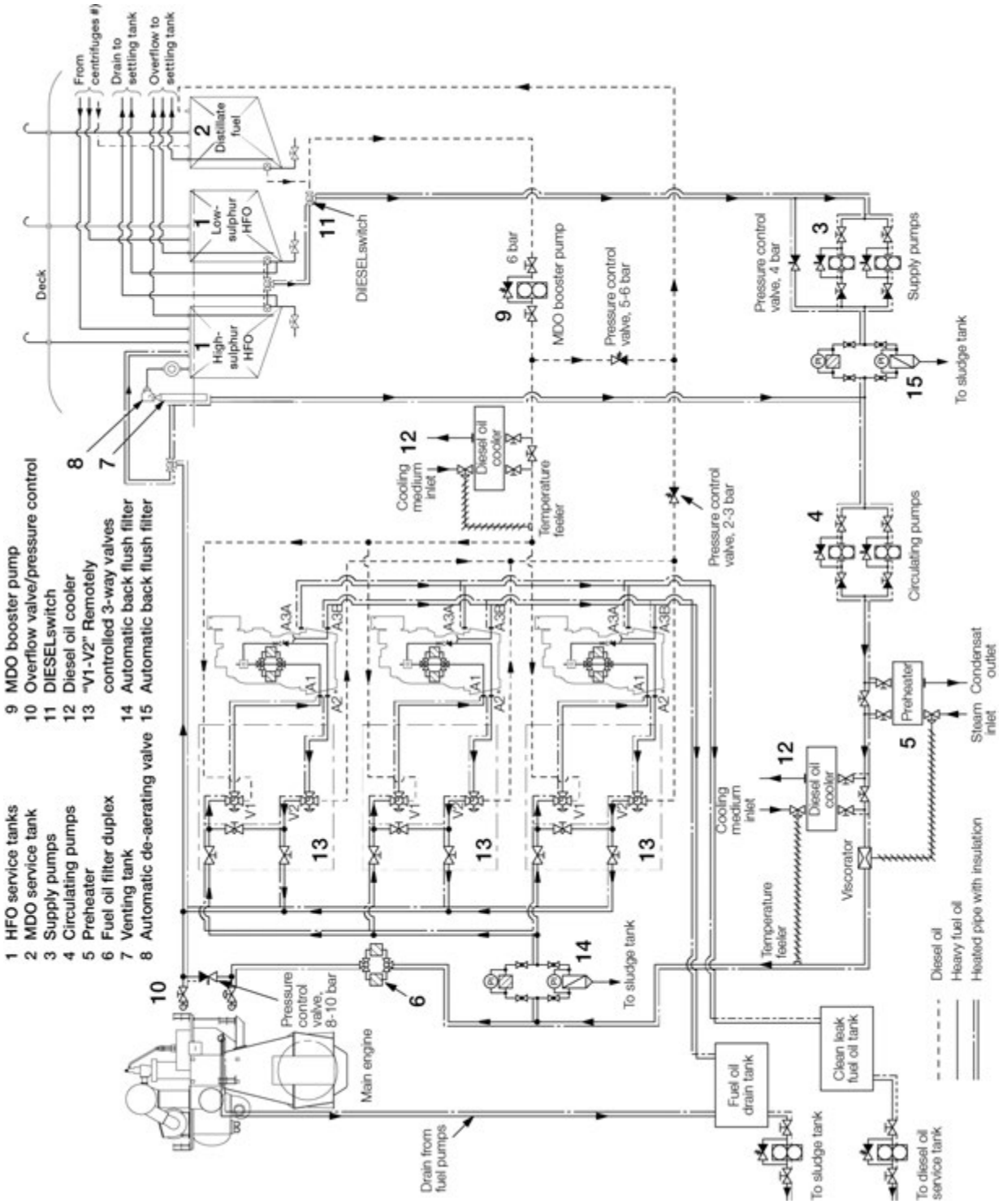

1631479-7.10

Fuel oil system
Description

2019-01-03 - en

1631479-7.10

Fuel oil system

Description

Fuel oil system without drain split

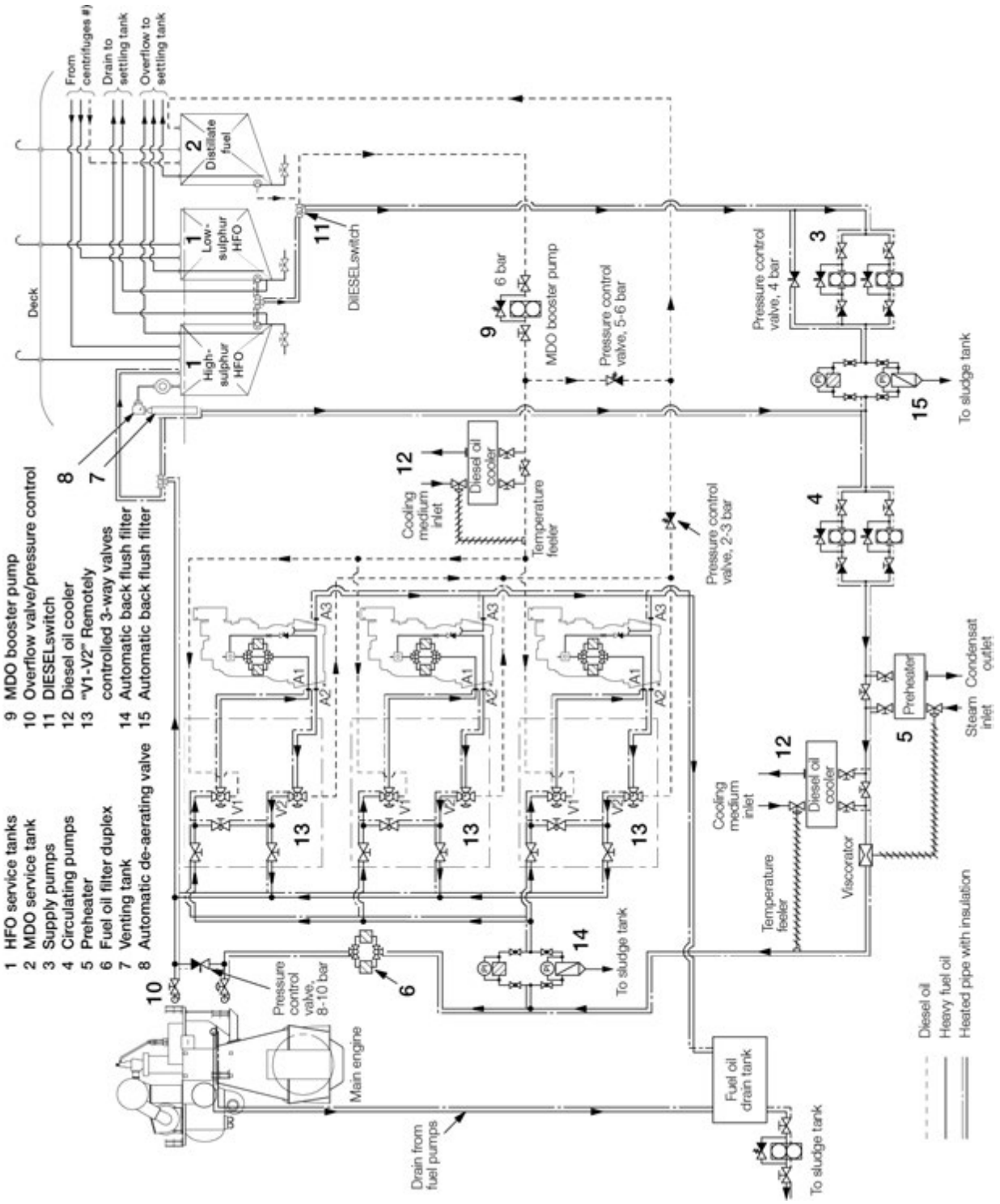

2019-01-03 - en

Design features and working principle

This diagram describes the uni-concept, i.e. the possibilities inherent to the design of a common auxiliary system for MAN Energy Solutions' two stroke low speed diesel engines and MAN Diesel & Turbo's four-stroke medium speed GenSets. The engines are designed to operate in accordance with the uni-fuel principle, meaning the same fuel for both main and auxiliary diesel engines.

The fuel oil system is a common, pressurized system using either heavy fuel oil or diesel oil. The primary purpose of pressurization is to avoid gasification and cavitation in the system. This may occur when the heavy fuel oil is heated to achieve a viscosity of 10-15 cSt required for injection.

Operation at sea

The fuel from the bunker tanks must be treated in centrifugal separators before entering the service tanks, see items 1 and 2. From the service tanks the fuel enters the supply system. The fuel is pumped by the supply pumps, item 3, into the circulating system at a pressure of 4 bars. The supply system may include an automatic back flush filter. The overflow from the supply pumps is re-circulated in the bypass piping that incorporates the overflow valve to keep the pressure in the circulation loop constant, irrespective of the actual consumption. The pumps in the circulation loop, item 4, raise the pressure of the fuel oil from the supply system to a constant inlet pressure as specified in "*B 19 00 0, Operation data & set points*".

The inlet pressure is maintained at the specified level by a spring-loaded overflow valve located close to the main engine, see item 10. The temperature controlled or viscosity controlled pre-heater, item 5, heats the heavy fuel oil until it reaches the required viscosity.

To safeguard the injection system components on the main engine is it recommended to install a fuel oil filter duplex, item 6, with a fineness of max. 50 microns (*sphere passing mesh*) as close as possible to the main engine.

GenSets with conventional fuel injection systems are equipped with a fuel oil filter duplex (safety filter), with a fineness of max. 25 microns (*absolute/sphere passing mesh*) The fuel oil filter duplex (*safety filter*) is with star-pleated filter elements and allows change-over during operation without pressure loss. The filter is compact and easy to maintain, requiring only manual cleaning when maximum allowable pressure drop is reached. The filter is equipped with a visual differential pressure indication and two differential pressure contacts to monitor the clogging of the filter. When maximum pressure drop is reached, the standby filter chamber is brought on line simultaneously as the dirty one is isolated by means of the change-over valve. After venting, the dirty element can be removed, cleaned and refilled to be the standby filter chamber.

To protect the GenSets from foreign particles in the fuel (*cat fines attack*), a common automatic back flush filter, item 14, must be installed in the circulation line, just before the branching to the individual GenSets. This will also extend the cleaning intervals of the filter elements in the aforementioned fuel oil filter duplex (*safety filter*) considerably.

The automatic back-flush filter with a change-over cock and bypass simplex filter and with integrated heating chamber has a mesh size of 10 microns (*absolute/sphere passing mesh*). The automatic back-flush filter permits a continuous operation even during back-flushing without any pressure drops or in-

2019-01-03 - en

terruptions of flow. If the filter inserts are clogged, an automatic cleaning is started. The filter is equipped with a visual differential pressure indication and two differential pressure contacts to monitor the clogging of the filter. Back-flushing medium is discharged discontinuously to a sludge tank or back to the settling tank.

To protect both the propulsion engine and the Gen- Sets from foreign particles in the fuel (*cat fines attack*), it is recommended to install a common 10 microns (*absolute/sphere passing mesh*) automatic back-flush filter, item 15, in the feeder circle.

Excess fuel oil is re-circulated via the venting pipe, item 7, where gases, if any, are released by a de-aerating valve, item 8, to avoid cavitation in the system. The flexibility of the system makes it possible, if necessary, to operate the auxiliary engines on either diesel oil or heavy fuel oil simultaneously by means of remotely controlled and interconnected 3- way valves, item 13, which are installed immediately before each auxiliary engine.

A separate diesel booster pump, item 9, supplies diesel oil from the service tank, item 2, to the auxiliary engines and returns any excess oil to the service tank. To ensure operation in case of a blackout the booster pump must have an immediate possibility of being powered by compressed air or by power supplied from the emergency generator / emergency switchboard. If a black-out occurs, the remotely controlled and interconnected 3-way valve at each auxiliary engine will automatically change over to the MDO supply system. Within few seconds the internal piping on the auxiliary engines will then be flushed with MDO and be ready for start up.

Depending on system lay-out, viscosity, and volume in the external fuel oil system, unforeseen pressure fluctuations can be observed.
In such cases it could be necessary to add pressure dampers to the fuel oil system.
For further assistance, please contact MAN Energy Solutions.

Operation in territorial waters / in port

If the fuel type for both the main engine and the auxiliary engines have to be changed from HFO to MDO/MGO and vice versa, the 3-way valve, item 11, just after the service tanks (the DIESELswitch) has to be activated. With the introduction of stricter fuel sulphur content regulations the main engine as well as the auxiliary engines increasingly have to be operated on distillate fuels, i.e. marine gas oil (MGO) and marine diesel oil (MDO). To maintain the required viscosity at the engine inlet it is necessary to install a cooler, item 12, in the fuel system. The lowest viscosity suitable for the main engine and the auxiliary engines is 2 cSt at engine inlet.

During operation in port when the main engine is stopped, but power from one or more auxiliary engines is still required, the supply pump, item 3, and the circulation pump, item 4, should be running.

The bypass line with overflow valve, item 10, between the inlet and outlet of the main engine serves the purpose of bypassing the main engine if, for instance, a major overhaul is required on the main engine fuel oil system. During this bypass the overflow valve takes over the function of the internal overflow valve of the main engine.

2019-01-03 - en

Fuel oil system

Fuel oil diagram with drain split

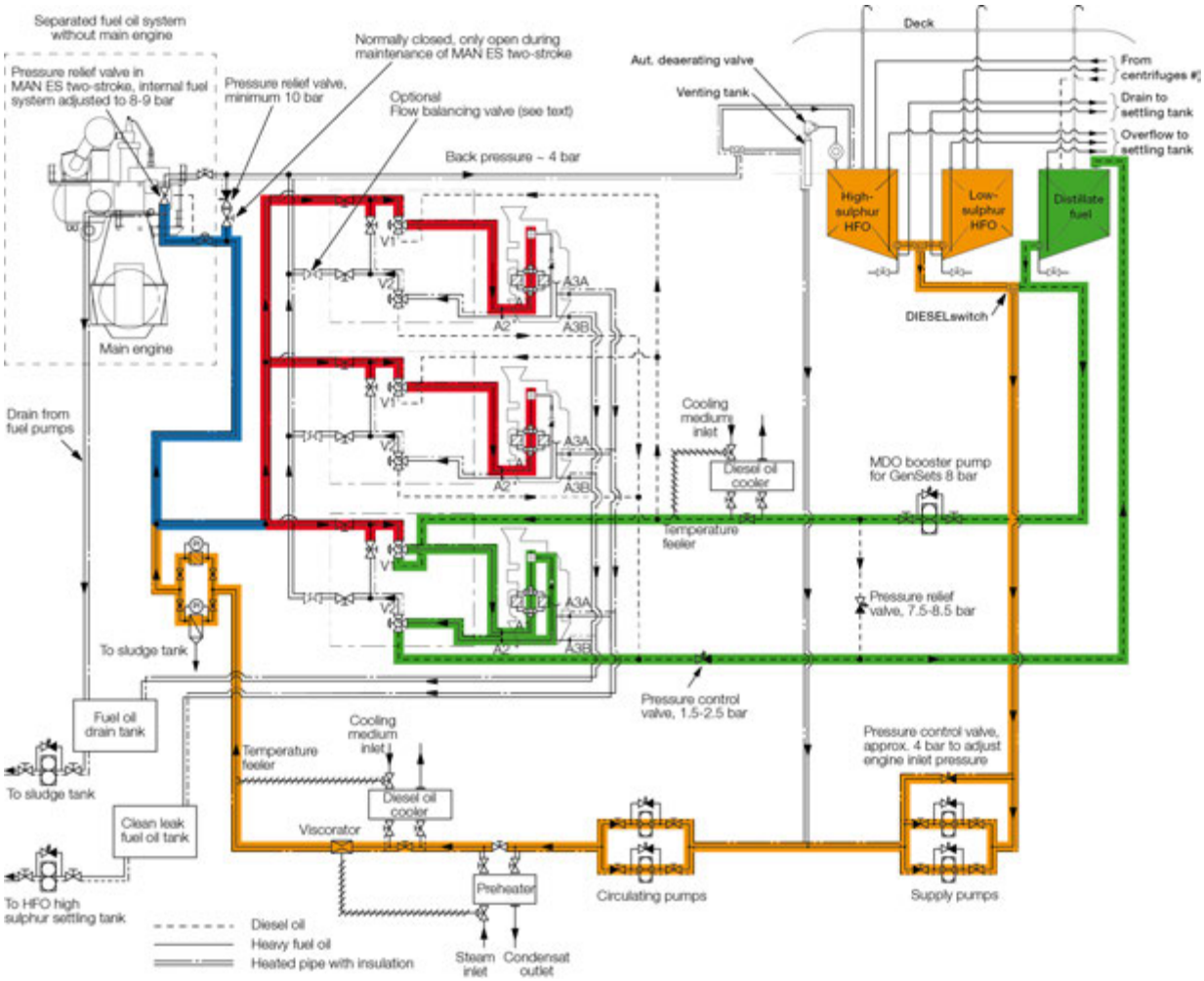

UNI-fuel

The fuel system is designed as a **UNI-fuel system** indicating that the MAN ES 2-stroke propulsion and the GenSets are running on the same fuel oil and are supplied from a common fuel system.

The UNI-fuel concept is a unique possibility for substantial savings in operating costs. It is also the simplest fuel system, resulting in lower maintenance and easier operation. The diagram is only for guidance. It has to be adapted in each case to the actual engine and pipe layout.

Tank design

There need to be a separate tank for all fuels available high-sulphur HFO, low-sulphur LSHFO, Distillate, etc.

In all fluids a natural settling of particles, takes place. This results in a higher concentration of particles in the bottom of the tanks. Due to this phenomenon it is important that the various fuel tanks are designed and operated correctly.

2025-03-19 - en

Tanks must be designed with a sloped bottom toward drainage outlet for easy collection of the settled particles. There must be drain valves in each tank for removing water and particles. Appropriate access should be provided for personnel to enable tank maintenance operations to be conducted safely.

The overflow pipe in the service tank must go to the bottom of the service tank to enable re-circulation; thus contributing to leading the highest particle concentration back to the settling tank. Overflow as a simple hole from tank to tank is not permitted.

Cat fines have a higher density than fuel oil and they tend to settle in the bottom of the service tanks. They might enter the engines in periodically high concentrations during rolling and pitching of the vessel in rough weather. Such a phenomenon can result in heavily cat fines attacks and engine damage.

Tank material and/or surface treatment have to be selected that it not will contaminate or change properties of fuel.

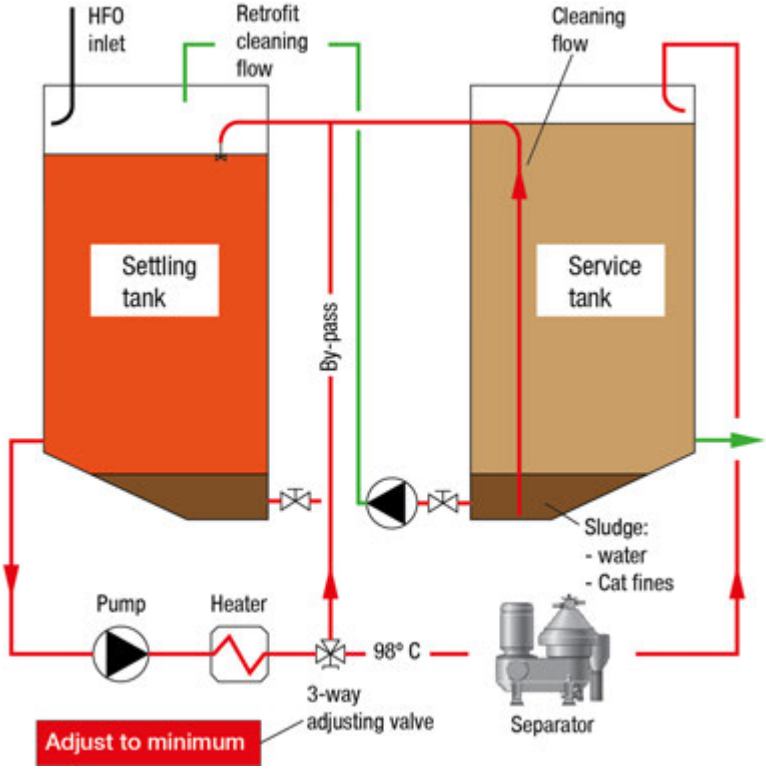

Fuel supply system

The common fuel supply system is a low pressurized system, consisting of “DIESELswitch”, HFO supply pumps with pressure control valves, venting tank and de-aerating valve.

Pump capacity is minimum fuel consumption for all engines in system running 100% load. *See “List of capacities” for each engine types*.

The fuel oil is led from one of the service tanks to one of the electrically driven supply pumps (*with redundancy*). It delivers the fuel oil with an adjusted pressure of approximately 4 bar to the fuel circulation system.

The venting pipe is connected to the service tank via an automatic de-aeration valve that will release any gases present.

2025-03-19 - en

Fuel circulation system

From the low-pressure supply fuel system the fuel oil is poured with return fuel from engines and led to one of the electrically driven circulating pumps (*with redundancy*), through preheater, diesel cooler, and equipment for controlling the viscosity, (*e.g. "Viscorator"*).

Pump capacity is minimum 3 times fuel consumption for all engines in system running 100% load. *See "List of capacities" for each engine types*.

The circulating pumps will always be running; even if the propulsion engine and one or several of the GenSets are stopped. Circulation of heated heavy fuel oil through the fuel system on all the engine(s) keep them ready to start with preheated fuel injection pumps.

The surplus amount of fuel oil is re-circulated in the engine and back through the venting pipe. To have a constant fuel pressure to the fuel injection pumps during all engine loads a spring-loaded pressure relief valve is installed internally in the MAN ES 2-stroke propulsion fuel oil system.

Fuel circulation pressure has to be 8-9 bar at MAN ES 2-stroke propulsion fuel oil inlet. Back-pressure in the circulation-system is approximately 4 bar (from supply system).

Fuel oil pressure for GenSet must be minimum 8 bars and can be up to 16 bar. It is therefore recommended to distribute fuel to GenSet(s) before main engine.

External relieve valve needs to be adjusted minimum 10 bar to avoid interference with internal valve. External relief valve can also be closed during normal operation and only opened when dismantling fuel oil system on MAN ES 2-stroke propulsion.

For UNI-fuel system without MAN ES 2-stroke propulsion it can be needed to use external pressure relief valve for adjusting the surplus amount of fuel.

Fuel preheater and diesel cooler should safely manage to control temperature. Clogging point, cloud and pour point of the bunkered fuel need to be considered in every operating areas and ambient temperatures.

Depending on system layout, viscosity, and volume in the external fuel oil system, unforeseen pressure fluctuations can be observed. In such cases it could be necessary to add pressure dampers to the fuel oil system. For further assistance, *please contact* MAN Energy Solutions.

Adjustment of fuel oil system

Please see detailed guideline for adequate adjustment and control of circulating fuel system. See "Setting the heavy fuel oil supply system" 010.000.023-25

In short terms are here the four steps that have to be performed:

1. Flow and pressure head of supply and circulation pumps
2. Flow distribution between main engine and GenSets
3. Flow distribution between GenSets (recommendation)
4. Adjustment of distillate circuit

2025-03-19 - en

Ad 3) Recommendation regarding flow balancing valves. In a UNI-fuel system with MAN ES 2-stroke propulsion and with large fuel flow in the system will the internal mounted fuel oil restrictions in GenSet be sufficient for controlling fuel flow over the GenSet.

If fuel system is separated and/or in systems with smaller main engine the above mentioned guideline can reveal insufficient fuel flow over the GenSet or uneven distribution between GenSet. Then it can be necessary to remove internal restrictions and mount external flow balancing valves to insure correct fuel flow for all GenSets.

Fuel filtration and cleaning

Fuel oil bunkers should always be considered as contaminated upon delivery and should therefore be thoroughly cleaned to remove solids as well as liquid contaminants before use. The solid contaminants in the fuel oil are mainly rust, sand, dust and refinery catalysts (cat fines). Liquid contaminants are mainly water, i.e. either fresh water or salt water. Impurities in the fuel can cause damage to the engine.

To protect against impurities in the fuel the most efficient filter setup is experienced to be following:

- Fuel oil separator between settling and service tank.
- Common automatic back-flush filter installed in the circulation line.
- Fuel oil filter duplex (*safety filter*) on each engine.

The fuel oil separator should be installed and constantly circulating the fuel between settling tank and service tank. Separator must not be selected too small for the purpose. It is recommended to be approximately 4 times bigger than the requested capacity flow of the supply system to have optimum cleaning efficiency. Correct viscosity/temperature is also important for efficiency of separator.

The automatic back-flush filter with a change-over cock and bypass simplex filter and with integrated heating chamber has a mesh size of 10 microns (absolute/sphere passing mesh). The automatic back-flush filter permits a continuous operation even during back-flushing without any pressure drops or interruptions of flow. If the filter inserts are clogged, an automatic cleaning is started. The filter is equipped with a visual differential pressure indication and two differential pressure contacts to monitor the clogging of the filter. Back-flushing medium is discharged discontinuously to a sludge tank or back to the settling tank.

Automatic back-flush filter will also extend the cleaning intervals considerably of the filter elements in the fuel oil filter duplex (*safety filter*).

Engines are equipped with a fuel oil filter duplex (safety filter) with a fineness of maximum 25 microns (absolute/sphere passing mesh). The filter is with star-pleated filter elements and allows change-over during operation without pressure loss. The filter is compact and easy to maintain, requiring only manual cleaning when maximum allowable pressure drop is reached. The filter is equipped with a visual differential pressure indication and two differential pressure contacts to monitor the clogging of the filter. When maximum pressure drop is reached, the standby filter chamber is brought on line simultaneously as the dirty one is isolated by means of the change-over valve. After venting, the dirty element can be removed, cleaned and refilled to be the standby filter chamber.

2025-03-19 - en

Former solution to protect both the propulsion engine and the GenSets with an automatic back-flush filter in the feeder circle is still valid.

NOTICE

A filter surface load of 1 l/cm² per hour must not be exceeded !

Operation on distillate

The distillate to the GenSets is recommended to be supplied by a separate pipeline from the service tank through a distillate booster pump. The capacity of the distillate booster pump must be minimum three times higher the amount of distillate consumed by the diesel engines at 100% load. *See list of capacities for each engine type*.

The system is designed in such a way that the fuel type for the GenSets can be changed independently of the fuel supply to the propulsion engine. As an option the GenSet plant can be delivered with the fuel changing system consisting of a set of remotely controlled, pneumatically actuated 3-way fuel changing valves “V1-V2” for each GenSet and a fuel changing valve control box common for all GenSets.

A separate fuel changing system for each GenSet gives the advantage of individually choosing distillate or HFO mode. Such a changeover may be necessary if the GenSets have to be:

- Entering SECA area
- Stopped for a prolonged period
- Stopped for major repair of the fuel system, etc.
- In case of a blackout / emergency start.

With the introduction of stricter fuel sulphur content regulations the propulsion engine as well as the GenSets increasingly have to be operated on distillate fuels, i.e. marine gas oil (MGO) and marine diesel oil (MDO). To maintain the required viscosity at the engine inlet, it is necessary to install a cooler in the fuel system. The lowest viscosity suitable for the main engine and the GenSets is 2 cSt at engine inlet.

Vessel that constantly will enter/exit SECA area, and has multiple GenSet installation, it is recommended not to change between fuels, but to select some GenSet for HFO and some GenSet for distillate fuels. The change-over procedure will then be starting/stopping GenSet and not changing between fuels.

Distillate pump capacity need to be minimum for one GenSet (see desription D 10 05 0 "List of capacities"). If 2 or more GenSets need to run distillate (ie. entering SECA) then distillate pump capacities must be adjusted accordingly.

If the fuel type for complete system both the propulsion engine and GenSets have to be changed from HFO to MDO/MGO/Distillate and vice versa, the 3-way valve (*“DIESELswitch”*) just after the service tanks has to be activated.

The change-over between HFO and MDO/MGO/Distillate needs to be done very thoroughly with high attention to temperature/viscosity. Incorrect handling can damage the engine.

2025-03-19 - en

An MDO separator must be installed upstream of the MDO service tank. Separation temperature must be in the range 40 – 50°C. Most solid particles (*sand, rust and catalyst particles*) and water can be removed, and the cleaning intervals of the filter elements can be extended considerably.

It is possible, however not our standard/recommendation, to install a common MGO/MDO back-flush filter for all GenSet.

Emergency start

MGO/MDO must be available in emergency situations. If a blackout occurs, the GenSets can be started up on MGO/MDO in three ways:

1. Pneumatic driven MGO/MDO circulation pump with air supply from starting air bottles. Air consumption of the pump must be included in calculation of starting air consumption and sizes of starting air bottles according to classification rules in this regard.
2. Electrical driven MGO/MDO circulation pump connected to the emergency switchboard.
3. MGO gravity tank (*100 - 200 litres*) can be arranged above the GenSet. With no pumps available, it is possible to start up the GenSet if a gravity tank can be installed minimum 8 metres directly above the GenSet. However, only if the connection to the GenSet is as directly as possible, meaning change-over valve “V1-V2” should be placed as near as possible to the GenSet.

Sampling points

Points for taking fuel oil samples are recommended in following locations:

1. After the fuel oil service tank. Before any fuel change-over valve.
2. Before and after any fuel filters and/or separator to verify the filter effectiveness
3. Before each engine fuel inlet pipe.

Sampling points should be provided at locations within the fuel system that enable samples of fuel to be taken in a safe manner.

Position of a sampling point should be placed such that the fuel sample is representative of the oil fuel quality passing that location within the system.

The sampling points should be located in positions away from any heated surface or electrical equipment.

2025-03-19 - en

Part-load optimisation - PLO

Description

MAN Energy Solutions is continuously adapting our engine programme to the changing market conditions.

At the request of various shipowners, we have developed and introduced a new IMO Tier II/III compliant tuning method for GenSets which mostly operate below the normal 75% MCR.

Tuning method – part load optimisation

The new tuning method is referred to as part load optimisation (PLO), and it is recommended for GenSets which mostly run below 75% MCR.

Traditionally, GenSets are fuel oil optimised at 85% MCR, but with PLO tuning, the engine performance is optimised at approx. 60-65% MCR, which ensures optimisation in the low-and part-load areas.

The most obvious benefit of applying PLO is the fuel oil saving of, typically, up to 5 g/kWh, depending on engine type/model and load point.

Furthermore, thanks to the improved combustion process resulting from the optimised nozzle ring in the turbocharger, valuable engine components, such as pistons, fuel equipment, valves and T/C nozzle ring, will be operating under optimal conditions at the given load.

The GenSets are fully compliant with IMO Tier II, even though the fuel oil consumption is reduced in the low and part load area, as a fuel oil penalty is imposed in the high load range.

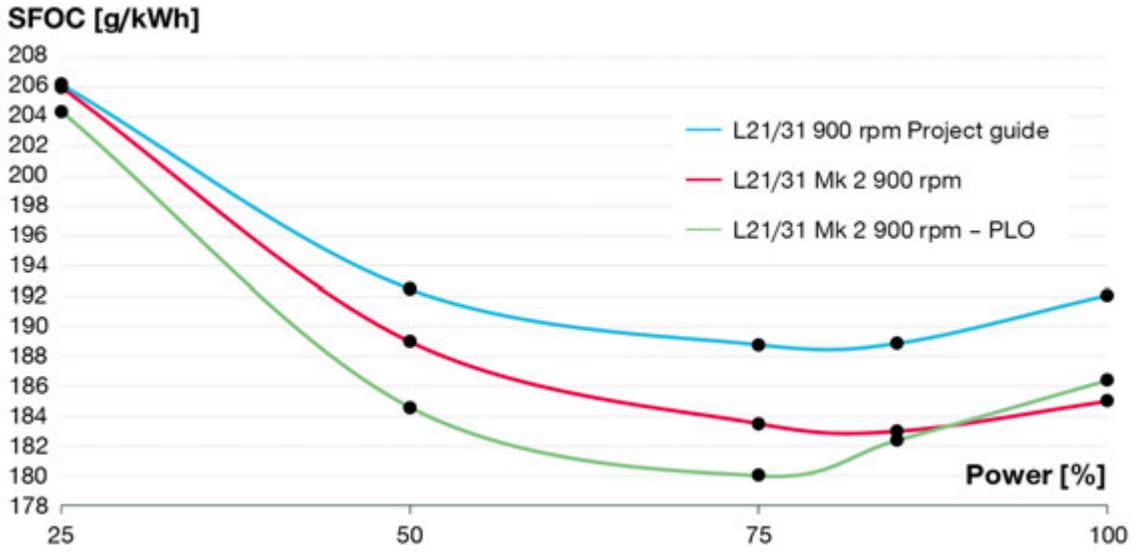

Figure 1: SFOC-curves from first delivery of PLO

However, a fuel oil penalty will rarely occur, since it is unusual that GenSets operate beyond 75% load, because the power management system will engage an additional GenSet when more power is needed.

2025-03-18 - en

PLO will give the same relative advantage when applied in combination with SCR-systems for IMO Tier III compliance.

Design changes:

- New turbocharger arrangement for optimised part-load operation
- Blow-off arrangement on charge air receiver to prevent “over-boosting” of engine at MCR operation
- Injection timing adjusted to optimum fuel consumption and less GHG emission

2025-03-18 - en

Residual fuel (HFO) specification

General information

Four-stroke diesel engines from Everllence can be powered with any residual fuel recovered from crude oil that fulfils the requirements specified in the table Heavy fuel oil requirements, provided that the engine and the fuel management system are designed accordingly. It is also referred to as: Residual fuels (RM), FAME Residual fuels (RF). In order to ensure a favourable ratio between fuel costs, spare parts and also repair and servicing expenditure, we recommend observing the following points.

Selection of suitable fuel

Unsuitable or adulterated fuel generally results in a shortening of the service life of engine parts/components, damage to these and to catastrophic engine failure. It is therefore important to select the fuel with care in terms of its suitability for the engine and the intended application. Through its combustion, the fuel influences the emissions behaviour of the engine.

Specifications and approvals

The fuel quality varies regionally and depends on climatic conditions. All requirements from ISO 8217:2024 apply

The following values must be maintained at the engine inlet:

Property	Unit		Limit value[1)]	Standard[2)]
Kin. viscosity at 50° C[3)]	mm/s	Max. Min.	700 1.9	EN ISO 3104, ASTM D7042, ASTM D445, DIN EN 16896
Kin. viscosity at 100°C[3)]	mm/s	Max.	55	EN ISO 3104, ASTM D7042, ASTM D445, DIN EN 16896
Density at 15°C	kg/m^3	Max.	1010	ISO 3675, ISO 12185
Water content[4)]	% (m/m)	Max.	0.20	DIN 51777, ASTM D6304, DIN ISO 3733
Sulphur content[5)]	% (m/m)	Max.	5.0	ISO 8754, ISO 14596, ASTM D4294
Flashpoint[6)]	°C	Min.	60.0	ISO 2719
Acid number	mg KOH/g	Max.	2.5	ASTM D664
Carbon residue (CCR)	% (m/m)	Max.	20.0	EN ISO 10370
Ash content	% (m/m)	Max.	0.150	ISO 6245
Hydrogen sulphide	mg/kg	Max.	2.0	IP 570
Total sediment (aged)	% (m/m)	Max.	0.10	ISO 10307-2
Asphaltene content	% (m/m)	Max.	2/3 x CCR	Factory standard, DIN 51595
Fatty acid methyl ester content[7)]	% (m/m)		Report	ASTM D7963, IP 631, DIN EN 14078, DIN EN 14103
Pour point[8)]	°C	Max.	30	ISO 3016

Residual fuel (HFO) specification

2025-09-30 - de

Residual fuel (HFO) specification

Property	Unit		Limit value[1)]	Standard[2)]
Vanadium	mg/kg	Max.	450	IP 501, IP 470, ISO 14597, DIN EN 15944 DIN 51790-6
Sodium	mg/kg	Max.	100 and 1/3 x vanadium	IP 501, IP 470
Aluminium and silicone[9)]	mg/kg	Max.	15	IP 501, IP 470, DIN ISO 10478
Calcium Zinc	mg/kg mg/kg	Max. Max.	30 15	IP 501, IP 470
Calcium Phosphorus	mg/kg mg/kg	Max. Max.	30 15	IP 501, IP 470, IP 500
CCAI[10)]		Max.	870	

Table 1: Heavy fuel oil requirements

Remarks:

[1)] Engine inlet requirement: Additional parameters defined for ISO 8217. The entire ISO 8217:2024 document is mandatory. The fuel mixture at the engine inlet must be homogeneous. The fuel mixture is homogeneous if the p-value according to ASTM D7060 is at min. 1.20. Other processes (e.g. ASTM D7112 or ASTM D7157) can also be used to check the homogeneity of the fuel mixture. Furthermore, the fuel must be fit for use and must not contain substances in a concentration that contributes to further contamination of the air and/or may impair the safety of personnel or the performance of the machine.

[2)] Always reference the latest edition.

[3)] If FAME is present in the HFO (RF), the max. viscosity is limited to 500 mm2/s at 50°C.
Specific requirements of the injection system must be taken into account.

[4)] According to ISO 8217:2024, the bunker product (before purification) may contain max. 0.50% water.

[5)] Local laws and regulations must be observed independently of the maximum possible sulphur content.

[6)] Additional requirements (e.g. SOLAS) must be observed. Applicable laws must be adhered to.

[7)] When using RF (FAME according to EN 14214 or ASTM D6751* and their mixtures with HFO), prior consultation with Everllence is required.
The FAME must either be in accordance with EN 14214 or with ASTM D6751 as well as with increased oxidation stability of at least 8 hours (EN 15751). For additional information see FAME mixtures.

[8)] The pour point must be suitably selected by the operating company in accordance with the design of the fuel system and on the basis of the requirements at the place of use.

[9)] The bunker product (prior to purification) may contain max. 60 mg/kg Al and Si.

[10)] This method is only applicable to ‘straight run’ residual oils. The increasing complexity of refinery processes means that the CCAI method does not correctly reproduce the ignition behaviour for all residual oils. A test device (fuel combustion analyser; FCA) based on the constant volume combustion method measures the ignition delay to determine the ignition quality of a fuel and this measurement is converted

2025-09-30 - de

into the cetane number (ECN: Estimated Cetane Number). It was discovered that residual fuels with a low ECN number cause malfunctions and can even lead to engine damage. An ECN > 20 can be considered acceptable.

Please submit enquiries to Everllence for all fuels which do not meet the abovementioned standards.

Residual fuel (HFO)

Origin/refinery process

The quality of the residual fuel depends to a large extent on the quality of the crude oil and the refining process used. For this reason, residual fuels of the same viscosity can have significantly different properties depending on the bunker spaces. Residual fuel can consist of a mixture of residual oil, distillates and FAME. Residual oils and distillates generally originate from modern refining processes, such as CatCracker or Visbreaker. These processes can have an adverse affect on the stability of the fuel and on the ignition and combustion properties. These factors also have a considerable effect on the preparation of the residual fuel and the operating results of the engine.

The engine operator is responsible for selecting the corresponding residual fuels.

Important

The fuel properties in the Residue Fuel Requirements table Heavy fuel oil requirements, even if they meet the requirements mentioned there, may not be sufficient to determine the ignition and combustion properties and stability of the fuel. This means that the operational performance of the engine may depend on properties that are not defined in the specification. This particularly applies to the oil property that causes formation of deposits in the combustion chamber, injection system, gas pipes and exhaust system. A number of fuels have a tendency towards incompatibility with lubricating oil which leads to deposits being formed in the fuel injection pump that can cause a blockage of the pumps. It may therefore be necessary to exclude specific fuels that could cause problems.

Blends

The addition of engine oils (old lubricating oil, ULO – used lubricating oil) and additives that are not manufactured from mineral oils, (coal-tar oil, for example), and residual products of chemical or other processes such as solvents (polymers or chemical waste) is not permitted. Some of the reasons for this are as follows: abrasive and corrosive effects, unfavourable combustion characteristics, poor compatibility with mineral oils and, last but not least, adverse effects on the environment. The order for the fuel must expressly state what is not permitted as the fuel specifications that generally apply do not include this limitation.

If engine oils (old lubricating oil, ULO – used lubricating oil) are added to fuel, this poses a particular danger as the additives in the lubricating oil act as emulsifiers that cause dirt, water and catfines to be transported as fine suspension. They therefore prevent the necessary cleaning of the fuel. In our experience (and this has also been the experience of other manufacturers), this can severely damage the engine and turbocharger components.

The addition of chemical waste products (solvents, for example) to the fuel is prohibited for environmental protection reasons according to the resolution of the IMO Marine Environment Protection Committee passed on 1st January 1992.

Leak oil collector

Leak oil collectors that act as receptacles for leak oil, and also return and overflow pipes in the lube oil system, must not be connected to the fuel tank. Leak oil lines should be emptied into sludge tanks.

Residual fuel (HFO) specification

2025-09-30 - de

Please submit enquiries to Everllence for all fuels which do not meet the abovementioned standards.

Additional information

The following information will clarify the correlation between the quality of the residual fuel, fuel preparation, engine operation and the operating results.

Viscosity/injection viscosity

Residual fuels with higher viscosity can be of lower quality. The maximum permissible viscosity depends on the available pre-heating equipment and the capacity (flow rate) of the separator.

The prescribed injection viscosity of 12-14 mm^2/s and the corresponding fuel temperature upstream of the engine must be complied with. Only in this way can a suitable atomisation and mixture formation be ensured and therefore low-residue combustion. This also prevents mechanical overload of the injection system at the same time. The prescribed injection viscosity and/or the required fuel oil temperature upstream of the engine can be found in the viscosity temperature diagram.

Heavy fuel oil preparation

Fault-free engine operation depends to a considerable extent on the care with which the heavy fuel oil was prepared. Particular attention should be paid to ensuring that inorganic foreign matter with a strongly abrasive effect (catalyst particles, rust, sand) are effectively separated. It has been shown in practice that wear as a result of abrasion in the engine increases considerably if the aluminium and silicon content is higher than 15 mg/kg.

Viscosity and density have an influence on the cleaning effect. This must be taken into account when designing and installing the cleaning system.

Vanadium/Sodium

If the vanadium/sodium ratio is unfavourable, the melting point of the ash may fall in the operating area of the exhaust valve which can lead to high-temperature corrosion. Most of the water and water-soluble sodium compounds it contains can be removed by pre-treating the heavy fuel oil in the settling tank and in the separators.

The risk of high-temperature corrosion is low if the sodium content is one third of the vanadium content or less. It must also be ensured that sodium does not enter the engine in the form of seawater in the intake air.

If the sodium content is higher than 100 mg/kg, this is likely to result in a higher quantity of salt deposits in the combustion chamber and exhaust-gas system. This will impair the function of the engine (including the suction function of the turbocharger).

Under certain conditions, high-temperature corrosion can be prevented using a fuel additive that increases the melting point of heavy fuel oil ash (see also Additional information).

Ash

Fuel ash consists for the greater part of vanadium oxide and nickel sulphate (see above chapter for more information). Heavy fuel oil containing a high proportion of ash in the form of foreign matter, e.g. sand, corrosion compounds and catalyst particles, accelerates the mechanical wear in the engine. Catalyst particles produced as a result of the catalytic cracking process may be present in the heavy fuel oil. In most cases, these catalyst particles are aluminium silicates causing a high degree of wear in the injection system and the engine.

Flashpoint

National and international regulations for transport and storage involving the use of fuel must be considered in regard to the flashpoint. In general, a flashpoint of above 60 °C is specified for fuels of diesel engines.

Residual fuel (HFO) specification

2025-09-30 - de

Low-temperature performance

The pour point is the temperature at which the fuel can no longer flow (but can be pumped). Since many residual fuels with low viscosity have a pour point above 0°C, the bunker facility must also be pre-heated. The entire fuel system must be designed in such a way that the residual fuel can be pre-heated to around 10°C above the pour point.

Pump properties

If the viscosity of the fuel is higher than 700 mm^2/s (cSt), or the temperature is not at least 10°C above the pour point, pump problems will occur. For more information, also refer to section Low-temperature behaviour.

Combustion properties

If the proportion of asphaltene is more than two thirds of the coke residue (Conradson), combustion may be delayed which in turn may increase the formation of combustion residues, leading to such as deposits on and in the injection nozzles, large amounts of smoke, low output, increased fuel consumption and a rapid rise in ignition pressure as well as combustion close to the cylinder wall (thermal overloading of lubricating oil film). If the ratio of asphaltenes to coke residues reaches the limit 0.66, and if the asphaltene content exceeds 8%, the risk of deposits forming in the combustion chamber and injection system is higher. These problems can also occur when using unstable residual fuels, or if incompatible residual fuels are blended. This would lead to an increased separation of asphalt (see section Compatibility).

Ignition quality

Nowadays, to achieve the prescribed reference viscosity, cracking-process products are used as the low viscosity ingredients of residual fuels although the ignition characteristics of these may also be poor. The cetane number of these compounds should be > 35. If the proportion of aromatic hydrocarbons is high (more than 35%), this also adversely affects the ignition quality.

The ignition delay in residual fuels with poor ignition characteristics is longer, the combustion is also delayed which can lead to thermal overloading of the oil film at the cylinder liner and also high cylinder pressures. The ignition delay and accompanying increase in pressure in the cylinder are also influenced by the end temperature and compression pressure, i.e. by the compression ratio, the charge-air pressure and charge-air temperature.

The disadvantages of using fuels with poor ignition characteristics can be limited by pre-heating the charge air in partial load operation and reducing the output for a limited period. However, a more effective solution is a high compression ratio and operational adjustment of the injection system to the ignition characteristics of the fuel used, as is the case with Everllence.

The ignition quality is one of the most important properties of the fuel. This value appears as CCAI in ISO 8217. This method is only applicable to ‘straight run’ residual oils. The increasing complexity of refinery processes has the effect that the CCAI method does not correctly reflect the ignition behaviour for all residual oils.

A test instrument based on the Fuel Combustion Analyser (FCA) method has been developed, which is used in some fuel testing laboratories (FCA according to IP 541).
The ignition quality of a fuel is determined as the ignition delay in the instrument and converted into an instrument-dependent cetane number (ECN: Estimated Cetane Number). It has been determined that residual fuels with a low ECN number cause operating problems and may even lead to damage to the engine. An ECN > 20 can be considered acceptable.

Residual fuel (HFO) specification

2025-09-30 - de

Residual fuel (HFO) specification

As the liquid components of the residual fuel have a decisive influence on the ignition quality, and flow properties determine the combustion quality, the system operator is responsible for obtaining a fuel that is suitable for the diesel engine. Also see illustration entitled Nomogram for determining the CCAI – assigning the CCAI ranges to engine types.

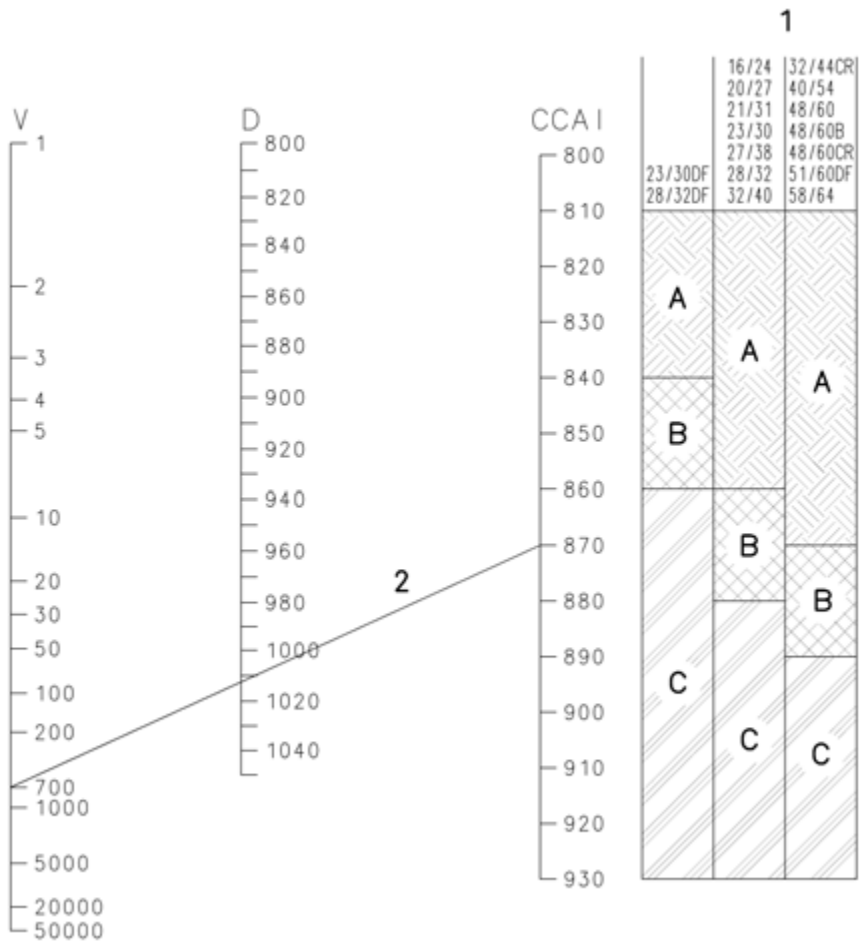

V Viscosity in mm^2/s (cSt) at 50°C

D Density [in kg/m^3] at 15°C

CCAI Calculated Carbon Aromaticity Index

1 Engine type

A Normal operating conditions

B The ignition characteristics can be poor and require an adjustment to the engine or the operating conditions.

C Any problems identified can even lead to engine damage after a short operating period.

2 The CCAI is calculated from the density and viscosity of the heavy fuel oil.

The CCAI can be calculated with the help of the following formula:

$$CCAI = D - 141 \log \log (V+0.85) - 81$$

Figure 1: Nomogram for determining the CCAI and assigning the CCAI ranges to engine types

2025-09-30 - de

Sulphuric acid corrosion

The engine should be operated at the coolant temperatures prescribed in the operating handbook for the relevant load. If the temperature of the components that are exposed to acidic combustion products is below the acid dew point, acid corrosion can no longer be effectively prevented, even if alkaline lube oil is used.

If the lubrication oil quality and the engine cooling system fulfil the specified requirements, the BN values stated in section 010.005 Engine – Operating Instructions 010.000.023-11 are sufficient.

Stability

The fuel must be a homogeneous mixture when entering the engine. Precipitation of any fuel components is not permissible! Experience has shown that stability decreases with continued storage and the given conditions. It is hence of great interest to the operator that the fuel has the maximum possible stability reserve so that it can provide a homogeneous fuel mixture at all times when entering the engine (see table Heavy fuel oil requirements).

Compatibility

The supplier must guarantee that the heavy fuel oil is homogeneous and remains stable even after the usual storage time. If different bunker oils are mixed, this may lead to separation that is connected with sludge build-up in the fuel system and where large quantities of sludge can be deposited in the separator, clog up the filter, prevent atomisation and lead to residue-rich combustion.

Cases like this can be traced back to incompatibility or instability. The fuel storage tanks should therefore be drained as much as possible before they can be bunkered again, in order to avoid incompatibilities.

Contamination

The fuel must not contain any substances that can lead to instability or deposits, otherwise engine operation may be impaired or engine damage may occur. With the help of an analysis according to ASTM D7845 (GC-MS), such substances can be partially detected and analysed. The fuel should be free of all substances listed in ASTM D7845, or their concentration should be below the limit of quantification noted therein. Proportions above the limit of quantification of all substances listed in ASTM D7845 can cause problems in engine operation. The combination of different substances could also cause problems with the engine even in a small amount.

Mixing residue fuels

If residual fuel for the main engine is blended with distillate fuel (e.g. DMA, FAME) or other residual fuels, to obtain the required quality, it is essential that the components are compatible (see section Compatibility). The compatibility of the resulting mixture must be tested over the entire mixing range. Reduced long-term stability due to consumption of the stability reserve can be a result. If a mixture of different fuels is planned or unavoidable, the stability reserve of the fuel must be sufficient to ensure that non-homogeneous fuels are not produced when blending.

Mixture with synthetic fuel

We strongly advise against using a mixture of HFO and synthetic fuel (in accordance with EN 15940). The reason is that the HFO contains asphaltenes, which are held in solution by the aromatics contained in HFO. Synthetic fuel is purely paraffinic (does not contain any aromatics) and therefore cannot hold asphaltenes in solution. This means that when synthetic fuel is added to HFO, these aromatics precipitate, deposits form or fuel filters become clogged or, in the worst case scenario, the injection system fails.

Additives for heavy fuel oil

Everllence- Engines can also be economically operated without additives. It is up to the customer to decide whether or not the use of additives is beneficial. The supplier of the additive must guarantee that the engine operation will not be impaired by using the product.

Residual fuel (HFO) specification

2025-09-30 - de

Residual fuel (HFO) specification

As a rule, the use of fuel additives during the warranty period must be avoided.

heavy fuel oil with low sulphur content

From the perspective of an engine manufacturer, there is no lower threshold for the sulphur content of heavy fuel oil. We have not identified any issues that can be traced to the sulphur content with the low-sulphur heavy fuel oils that are currently commercially available.

If the engine is not constantly operated with low-sulphur heavy fuel oil, the lubricating oil must be selected accordingly for the highest sulphur content of the utilised fuels.

FAME mixtures

FAME admixtures (RF20 to RF500)

When using RF (FAME according to EN 14214 or ASTM D6751* and their mixtures with HFO), prior consultation with Everllence is required. In addition, the following should be observed:

- The fuel mixture at the engine inlet must be homogeneous. The fuel mixture is homogeneous if the p-value according to ASTM D7060 is at least 1.20. Other processes (e.g. ASTM D7112 or ASTM D7157) can also be used to check the homogeneity of the fuel mixture. Furthermore, the fuel must be fit for use and must not contain substances in a concentration that contribute to further contamination of the air and/or may impair the safety of personnel or the performance of the machine.
- If RF is to be used with other fuels and blending cannot be avoided, contact your fuel supplier to ensure the compatibility of these fuels.
- After switching to RF, pay attention to the delta pressure indicators/alarms of the filters, as they can become clogged by residues dissolved by RF.
- Heating is installed and active in the fuel supply system to prevent deposits or blockages to the pipes.
- The temperature resistance of the fuel must be guaranteed up to 150°C.
- Storage and leakage handling of FAME fuels, FAME mixtures with residual fuels and distillate fuels must be separated from each other in order to avoid incompatibility reactions due to the mixing of larger amounts of different fuels.
- Due to the typically lower calorific value or energy content of RF, it may result in deviations to the specified engine output, operating behaviour, load application, specific fuel consumption and emissions.
- Fuels may cause harmful reactions with metals such as zinc or copper. We highly recommend getting in contact with your tank and heating oil system supplier.
- The sealing materials used must be suitable for RF. NBR seals are not suitable and must not be used.
- RF reacts to air and this may lead to microbial growth. Ensure that the atmospheric oxygen ventilation is kept to a minimum. A nitrogen buffer is ideally installed in the fuel tank.
- RF tends to attract water. This increases the risk of microbial growth. Correctly adjust the separator to the new fuel type.
- If free water appears in the fuel tanks, it is important to drain this water immediately.
- Long standstill periods (e.g. emergency power units) must be avoided due to microbial growth. To prevent damage, it is recommendable to only operate applications with fuel which is free of FAME.

2025-09-30 - de

- The entire fuel system must be purged with fuel which is free of FAME prior to longer standstill periods.
- Since FAME has a higher evaporation temperature, it accumulates in the lubricating oil. Regular analysis of all the lubricating oil is highly recommended. The lubricating oil needs to be replaced if a FAME content of 12% is reached.
- RF may cause a layer to form, such a phenomenon leads to increased consumption of lubricating oil. If such an increase in lubricating oil consumption values is detected, please contact your Everllence PrimeServ department.

In any case, it is the responsibility of the operating company to adhere to the legal requirements (e.g. SOLAS) and agree on these with the relevant authorities.

* as well as with increased oxidation stability of at least 8 hours (EN 15751).

Cold suitability

The cold suitability of the fuel is determined by the climatic requirements at the place of installation. It is the responsibility of the operating company to choose a fuel with sufficient cold suitability.

The cold suitability of a fuel may be determined and assessed using the following standard:

- Pour point as per ISO 3016

Analyses

To ensure sufficient cleaning of the fuel via the separator, perform regular functional check by sampling up- and downstream of the separator.

The examination of fuel samples is essential for safe engine operation. Examinations can be carried out in the Everllence PrimeServLab laboratory for our customers.

To guarantee the safety of the crew and to obtain a representative sample, sampling must take place in accordance with valid Everllence operating instructions.

Residual fuel (HFO) specification

2025-09-30 - de

Residual fuel (HFO) specification

This page is intentionally left blank

2025-09-30 - de

Marine diesel oil (DMB, DFB) specifications

General information

Marine diesel oil as a heavy distillate is available for marine applications only. Another names are: Marine diesel oil (MDO), DMB, DFB. It is made from crude oil and may contain synthetic components (e.g. BtL, CtL, GtL and HVO). The fuel is treated the same as residual fuel in the supply chain. This means that it is possible for the fuel to be blended with high-viscosity residual fuel residue, e.g. in a bunker vessel, and it might therefore contain residue from crude oil processing. This can affect the properties of the fuel.

Selection of suitable fuel

Unsuitable or adulterated fuel generally results in a shortening of the service life of engine parts/components, damage to these and to catastrophic engine failure. It is therefore important to select the fuel with care in terms of its suitability for the engine and the intended application. Through its combustion, the fuel influences the emissions behaviour of the engine.

Specifications and approvals

The fuel quality varies regionally and depends on climatic conditions. All requirements from ISO 8217:2024 apply.

The following values must be maintained at the engine inlet:

Property	Unit		Limit value[1)]	Standard[2)]
Appearance[3)]	–	–	Free from contamination	visually
Kinematic viscosity at 40 °C[4)]	mm^2/s	Max. Min.	11.0 2.0	ISO 3104, ASTM D7042, ASTM D445, DIN EN 16896
Density at 15°C	kg/m^3	Max. Min.	900.0 820.0	ISO 3675, ISO 12185
Water content	% (m/m)	Max.	0.02	DIN 51777, DIN EN 12937, ASTM D6304
Cetane number		Min.	35	EN ISO 5165, IP541, EN 15195, EN 16715, EN 17155
Sulphur content[5)]	% (m/m)	Max.	1.50	EN ISO 8754, EN ISO 14596, ASTM D4294, DIN 51400-10
Flashpoint[6)]	°C	Min.	60.0	ISO 2719
Acid number	mg KOH/g	Max.	0.5	ASTM D664
Carbon residue	% (m/m)	Max.	0.30	ISO 10370
Ash content	% (m/m)	Max.	0.010	ISO 6245
Lubricity (WSD)	µm	Max.	520	ISO 12156-1, ASTM D6079
Corrosion effect on copper	Class	Max.	1	ISO 2160
Hydrogen sulphide	mg/kg	Max.	2.0	IP 570

Marine diesel oil (DMB, DFB) specifications

2025-10-02 - de

Marine diesel oil (DMB, DFB) specifications

Property	Unit		Limit value[1)]	Standard[2)]
FAME[7)]-content DMB	% (V/V)	Max.	0.5	ASTM D7963, IP 579, DIN EN 14078
FAME[7)]-content DFB	% (V/V)	Max.	7.0	ASTM D7963, IP 579, DIN EN 14078
Oxidation stability DMB	g/m^3	Min.	25	ISO 10307-1
Oxidation stability[8)] DFB	h	Min.	8.0	ISO 10370
Na, K, Ca, P, Cu, Zn, Si	mg/kg	Max.	free from	DIN EN 16476

Table 1: Requirements for diesel fuel (DMB/DFB)

Remarks:

[1)] The fuel must be suitable for the intended application. It must not contain any substance in a concentration that causes additional air pollution, is harmful for personnel, jeopardises ship safety and/or has an adverse effect on machine performance. The fuel must be free from non-ferrous metals according to DIN EN 16476. The fuel must not contain any waste oil.

[2)] Always in relation to the currently applicable edition.

[3)] Only possible with clear samples. If the sample is not clear or contains visible contamination, the check must be completed mandatorily for the entire sediment.

[4)] Specific requirements of the injection system must be taken into account

[5)] Local laws and regulations must be observed independently of the maximum possible sulphur content.

[6)] Additional requirements (e.g. SOLAS) must be observed. Applicable laws must be adhered to.

[7)] The FAME must either be in accordance with EN 14214 or with ASTM D6751 as well as with increased oxidation stability of at least 8 hours (EN 15751).

[8)] If there is more than 2% (V/V) FAME, an analysis as per EN15751 must additionally be carried out.

Approved fuels

The following fuels are approved for use if the fuel complies with table Requirements for diesel fuel (DMB/DFB):

- Class ISO F-DMB according to ISO 8217:2024
- Class ISO F-DFB according to ISO 8217:2024 with additional requirement regarding oxidation stability

Please submit enquiries to Everllence for all fuels which do not meet the abovementioned standards.

Viscosity

In order to ensure sufficient lubrication, a minimum level of viscosity must be ensured at the fuel injection pump. The specified maximum temperature required to maintain a viscosity of more than 1.9 mm^2/s upstream of the fuel injection pump depends on the fuel viscosity. The temperature of the fuel upstream of the fuel injection pump must not exceed 45 °C in any case. The lubricity requirement for the fuel upstream of the engine is a maximum of 520 µm WSD in each case according to ISO 12156-1.

2025-10-02 - de

Contamination

We recommend installing a separator upstream of the fuel filter. Separation temperature 40–50°C. Most solid particles (sand, corrosion and catalytic converter fragments) and water can thus be removed and the cleaning intervals for the filter elements can be significantly extended.

FAME (Fatty acid methyl ester) additive up to max. 7 %

Using fuels with biofuel admixture based on fatty acid methyl ester (FAME) of max. 7 vol. % is possible.
The FAME must comply with the requirements stipulated in EN 14214 or ASTM D6751.*

It is the responsibility of the operating company that the fuel always complies with all requirements in table Requirements for diesel fuel (DMB/DFB).

Applications with longer standstill periods (e.g. emergency power units) can be affected by fuel ageing. To prevent damage, it is recommendable to only operate these applications with fuel which is free of FAME or to purge the entire fuel system with fuel which is free of biodiesel prior to longer standstill periods.

FAME blends typically contain a higher water content. This higher water content must be reduced by appropriate means in order to adhere to the maximum permissible water content at the engine inlet.

In any case, it is the responsibility of the operating company to adhere to the legal requirements (e.g. SOLAS).

Everllence is not liable for damage caused to the engine or subsequent damage resulting from this caused by FAME fuel blends.

* as well as with increased oxidation stability of at least 8 hours (EN 15751)

Cold suitability

The cold suitability of the fuel is determined by the climatic requirements at the place of installation. It is the responsibility of the operating company to choose a fuel with sufficient cold suitability.

The cold suitability of a fuel may be determined and assessed using the following standards:

- Limit of filterability (CFPP) as per EN 116
- Pour point as per ISO 3016
- Cloud point as per EN 23015

To be able to draw a reliable conclusion, it is recommended to perform all three stated procedures.

Analyses

The examination of fuel samples is essential for safe engine operation. Examinations can be carried out in the Everllence PrimeServLab laboratory for our customers.

Marine diesel oil (DMB, DFB) specifications

2025-10-02 - de

To guarantee the safety of the crew and to obtain a representative sample, sampling must take place in accordance with valid Everllence operating instructions.

Marine diesel oil (DMB, DFB) specifications

2025-10-02 - de

Diesel fuel (DMA, DFA) specifications

General information

Diesel fuel is a middle distillate refined from crude oil. It is also referred to as: gas oil, marine gas oil (DMA), DFA, diesel oil. It should not contain any residue from crude oil refining.

Selection of suitable fuel

Unsuitable or adulterated fuel generally results in a shortening of the service life of engine parts/components, damage to these and to catastrophic engine failure. It is therefore important to select the fuel with care in terms of its suitability for the engine and the intended application. Through its combustion, the fuel influences the emissions behaviour of the engine.

Specifications and approvals (DMA)

The fuel quality varies regionally and depends on climatic conditions. All requirements from ISO 8217:2024 apply

The following values must be maintained at the engine inlet:

Property	Unit		Limit value[1)]	Standard[2)]
Appearance	-	-	Clear, bright and free from visible contamination	visual
Kinematic viscosity at 40° C[3)]	mm^2/s	Max. Min.	6.0 2.0	ISO 3104, ASTM D7042, ASTM D445, DIN EN 16896
Density at 15°C	kg/m^3	Max. Min.	890.0 820.0	ISO 3675, ISO 12185
Water content	% (m/m)	Max.	0.02	DIN 51777, DIN EN 12937, ASTM D6304
Cetane number		Min.	40	EN ISO 5165, IP541, EN 15195, EN 16715, EN 17155
Sulphur content[4)]	% (m/m)	Max.	1.0	ISO 8754, ISO 14596, ASTM D4294, DIN 51400-10
Flashpoint[5)]	°C	Min.	60.0	ISO 2719
Acid number	mg KOH/g	Max.	0.5	ASTM D664
Carbon residue[6)]	% (m/m)	Max.	0.30	ISO 10370
Ash content	% (m/m)	Max.	0.010	ISO 6245
Lubricity (WSD)	µm	Max.	520	ISO 12156-1, ASTM D6079
Corrosion effect on copper	Class	Max.	1	EN ISO 2160
Hydrogen sulphide	mg/kg	Max.	2.0	IP 570
FAME[7)]-content	% (V/V)	Max.	0.5	ASTM D7963, IP 579, DIN EN 14078
Oxidation stability	g/m^3	Min.	25	EN ISO 12205

Diesel fuel (DMA, DFA) specifications

2025-10-02 - de

Diesel fuel (DMA, DFA) specifications

Property	Unit		Limit value[1)]	Standard[2)]
Sediment content[8)]	% (m/m)	Max.	0.01	ISO 10307-1
CFPP	°C		10°C below the lowest temperature in the fuel system	DIN EN 116, IP 309, IP 612
Pour Point[9)] winter grade	°C	Max.	-6	ISO 3016
Pour Point[9)] summer grade	°C	Max.	0	ISO 3016
Na, K, Ca, P, Cu, Zn, Si	mg/kg	Max.	free from	DIN EN 16476

Table 1: Requirements for diesel fuel (DMA)

Remarks:

[1)] The fuel must be suitable for the intended application. It must not contain any substance in a concentration that causes additional air pollution, is harmful for personnel, jeopardises ship safety and/or has an adverse effect on machine performance. The fuel must be free from non-ferrous metals according to DIN EN 16476. The fuel must not contain any waste oil.

[2)] Always refer to the currently applicable edition.

[3)] Specific requirements of the injection system must be taken into account

[4)] Independent of the maximum permissible sulphur content, local laws and regulations must be adhered to

[5)] Additional requirements (e.g. SOLAS) must be observed. Applicable laws must be adhered to.

[6)] Determined at 10% distillation residue

[7)] The FAME must either be in accordance with EN 14214 or with ASTM D6751 as well as with increased oxidation stability of at least 8 hours (EN 15751). For information on the use of fuels with more than 0.5% FAME see section FAME (fatty acid methyl ester) additive of 0.5 to 100% (DFA)

[8)] If the sample is not clear and bright, complete sedimentation through hot filtration and the determination of water content is required

[9)] 10°C below the lowest temperature in the fuel system

The following fuels are approved for use if the fuel complies with table Requirements for diesel fuel (DMA):

- Classes ISO F-DMA & DMZ according to ISO 8217:2024
- Diesel fuel as per EN 590:2022 with additional requirement regarding flashpoint > 60 °C in SOLAS regulated areas
- Diesel fuel no. 2-D as per ASTM D975-21 with additional requirement regarding flashpoint > 60 °C in SOLAS regulated areas

Please submit enquiries to Everllence for all fuels which do not meet the abovementioned standards.

2025-10-02 - de

Viscosity

In order to ensure sufficient lubrication, a minimum level of viscosity must be ensured at the fuel injection pump. The specified maximum temperature required to maintain a viscosity of more than 1.9 mm^2/s upstream of the fuel injection pump depends on the fuel viscosity. The temperature of the fuel upstream of the fuel injection pump must not exceed 45 °C in any case. The lubricity requirement for the fuel upstream of the engine is a maximum of 520 µm WSD in each case according to ISO 12156-1.

Military fuel specification

The fuels of type F-75 or F-76 as per NATO STANAG 1385 can be used if they fully comply with the standards or limit values listed in the table Requirements for diesel fuel (DMA) pursuant to ISO 8217:2024 and the minimum permissible viscosity upstream of the injection pump with the corresponding temperature is adhered to.

Synthetic fuels (DIN EN 15940)

When using synthetic fuels according to DIN EN 15940 with a density of less than 820 kg/m^2 at 15 °C, prior consultation with Everllence is required.

Synthetic fuels such as HVO, BTL, CTL, GTL according to DIN EN 15940, can be produced from renewable electrical energy and CO_2 or from the same basic material such as FAME fuels (vegetable oil, cooking oil, animal fat) but in a completely different procedure. Synthetic fuels are produced by means of hydrogen treatment, with a fuel being generated which has a very similar chemical structure to high-performance diesel fuel and consists of paraffinic hydrocarbons. In contrast to fossil diesel fuel, synthetic fuel barely contains any aromatic components, which causes very good combustion properties.

Although the energy content (per mass unit) is higher in comparison with fossil diesel fuel, the volumetric energy content is lower due to the lower density (typically approx. 780 kg/m^3 at 15°C). This may lead to deviations in the specified engine output, operating behaviour, load application and emissions as well as deviations in the specific fuel consumption.

The lubricity of synthetic fuels is relatively low. In order to meet fuel specifications (requirements on diesel fuel) and guarantee sufficient lubricity of the fuel, the fuel supplier needs to add a lubricity additive or FAME.

The lower flashpoint limit is too low at a minimum of 55°C. The additional requirement relating to flashpoint min. 60 °C in SOLAS regulated areas must be observed.

We strongly advise against using a mixture of HFO and synthetic fuel (in accordance with EN 15940). The reason is that the HFO contains asphaltenes, which are held in solution by the aromatics contained in HFO. Synthetic fuel is purely paraffinic (does not contain any aromatics) and therefore cannot hold asphaltenes in solution. This means that when synthetic fuel is added to HFO, these asphaltenes precipitate, deposits form or fuel filters become clogged or, in the worst case scenario, the injection system fails.

FAME (fatty acid methyl ester) additive of 0.5 to 100% (DFA)

The following values must be maintained at the engine inlet:

Diesel fuel (DMA, DFA) specifications

2025-10-02 - de

Diesel fuel (DMA, DFA) specifications

Diesel fuel (DMA, DFA) specifications

Property	Unit		Limit value[1]	Standard[2]
Appearance	-	-	Clear, bright and free from visible contamination	visually
Kinematic viscosity at 40° C[3]	mm^2/s	Max. Min.	6.0 2.0	ISO 3104, ASTM D7042, ASTM D445, DIN EN 16896
Density at 15°C	kg/m^3	Max. Min.	890.0 820.0	ISO 3675, ISO 12185
Water content	% (m/m)	Max.	0.02	DIN 51777, DIN EN 12937, ASTM D6304
Cetane number		Min.	40	EN ISO 5165, IP541, EN 15195, EN 16715, EN 17155
Sulphur content[4]	% (m/m)	Max.	1.0	ISO 8754, ISO 14596, ASTM D4294, DIN 51400-10
Flashpoint[5]	°C	Min.	60.0	ISO 2719
Acid number	mg KOH/g	Max.	0.5	ASTM D664
Carbon residue[6]	% (m/m)	Max.	0.30	ISO 10370
Ash content	% (m/m)	Max.	0.010	ISO 6245
Lubricity (WSD)	µm	Max.	520	ISO 12156-1, ASTM D6079
Corrosion effect on copper	Class	Max.	1	EN ISO 2160
Hydrogen sulphide	mg/kg	Max.	2.0	IP 570
FAME[7]-content	% (V/V)	Min.	0.5	ASTM D7963, IP 579, DIN EN 14078
Oxidation stability	h	Min.	8	EN 15751
Sediment content[8]	% (m/m)	Max.	0.01	ISO 10307-1
CFPP	°C		10°C below the lowest temperature in the fuel system	DIN EN 116, IP 309, IP 612)
Pour Point[9] winter grade	°C	Max.	-6	ISO 3016
Pour Point[9] summer grade	°C	Max.	0	ISO 3016
Na, K, Ca, P, Cu, Zn, Si	mg/kg	Max.	free from	DIN EN 16476

Table 2: Requirements for diesel fuel (DMA)

Remarks:

[1] The fuel must be suitable for the intended application. It must not contain any substance in a concentration that causes additional air pollution, is harmful for personnel, jeopardises ship safety and/or has an adverse effect on machine performance. The fuel must be free from non-ferrous metals according to DIN EN 16476. The fuel must not contain any waste oil.

[2] Always refer to the currently applicable edition.

[3] Specific requirements of the injection system must be taken into account

2025-10-02 - de

[4] Independent of the maximum permissible sulphur content, local laws and regulations must be adhered to

[5] Additional requirements (e.g. SOLAS) must be observed. Applicable laws must be adhered to.

[6] Determined at 10% distillation residue

[7] The FAME must either be in accordance with EN 14214 or with ASTM D6751 as well as with increased oxidation stability of at least 8 hours (EN 15751).

[8] If the sample is not clear and bright, complete sedimentation through hot filtration and the determination of water content is required

[9] 10°C below the lowest temperature in the fuel system

When using DFA (FAME according to EN 14214 or ASTM D6751* or their mixtures with DMA), prior consultation with Everllence is required. In addition, the following should be observed:

- Due to the typically lower calorific value or energy content of FAME fuels and their mixtures with DMA (DFA), it may result in deviations to the specified engine output, operating behaviour, load application, specific fuel consumption and emissions.
- The sealing materials used must be suitable for DFA. NBR seals are not suitable and must not be used.
- DFA tends to attract water. The risk of microbial growth is therefore increased. For this reason, the water content needs to be kept as low as possible. The maximum water content must not be exceeded. Everllence recommends draining water from the fuel tank every day.
- Long standstill periods (e.g. emergency power units) must be avoided due to microbial growth. To prevent damage, it is recommendable to only operate applications with fuel which is free of FAME (DMA).
- The fuel reacts to air and this may lead to microbial growth. Ensure that the atmospheric oxygen ventilation is kept to a minimum. A nitrogen buffer is ideally installed in the fuel tank.
- The entire fuel system must be purged with fuel which is free of FAME (DMA) prior to longer standstill periods.
- If DFA is to be used with other fuels and mixing cannot be avoided, contact your fuel supplier to ensure the compatibility of these fuels.
- It is recommended that wherever possible a heat tracing system is installed in the fuel supply system, in order to prevent deposits or blockage of the lines.
- As DFA have a higher evaporation temperature than standard DMA qualities, these are enriched in lubricating oil. Regular analysis of all the lubricating oil is highly recommended. The lubricating oil needs to be replaced if a FAME content of 12% is reached.
- DFA may cause a layer to form, such a phenomenon leads to increased consumption of lubricating oil. If such an increase in lubricating oil consumption values is detected, please contact your Everllence PrimeServ department.
- Fuels may cause harmful reactions with metals such as zinc or copper. We highly recommend getting in contact with your tank and heating oil system supplier.
- After switching to DFA, pay attention to the delta pressure indicators/ alarms of the filters, as the residues dissolved by DFA can clog the filters.

Diesel fuel (DMA, DFA) specifications

2025-10-02 - de

- In any case, it is the responsibility of the operating company to adhere to the legal requirements (e.g. SOLAS) and agree on these with the relevant authorities.

* as well as with increased oxidation stability of at least 8 hours (EN 15751)

Cold suitability

The cold suitability of the fuel is determined by the climatic requirements at the place of installation. It is the responsibility of the operating company to choose a fuel with sufficient cold suitability.

The cold suitability of a fuel may be determined and assessed using the following standards:

- Limit of filterability (CFPP) as per EN 116
- Pour point as per ISO 3016
- Cloud point as per EN 23015

To be able to draw a reliable conclusion, it is recommended to perform all three stated procedures.

Analyses

The examination of fuel samples is essential for safe engine operation. Examinations can be carried out in the Everllence PrimeServLab laboratory for our customers.

To guarantee the safety of the crew and to obtain a representative sample, sampling must take place in accordance with valid Everllence operating instructions.

Diesel fuel (DMA, DFA) specifications

2025-10-02 - de

Non-standardised fuels

General information

Non-standardised fuels are fuels that are not based on mineral oil or comply with ISO 8217, and fuels that contain larger proportions of bio-fuels (fatty acid methyl ester). Such bio-fuel components are typically produced from oleiferous plants or used cooking oil. Residues from bio-fuel production can also be included.

In order to use a fuel like this, a Non-Standard Fuel Request (NSR) must be submitted. This request must be approved before the fuel can be used.

Selection of suitable fuel

Unsuitable or adulterated fuel generally results in a shortening of the service life of engine parts/ components, damage to these and to catastrophic engine failure. It is therefore important to select the fuel with care in terms of its suitability for the engine and the intended application. Through its combustion, the fuel influences the emissions behaviour of the engine.

Specifications

The fuel quality varies regionally and is dependent on climatic conditions.

The following fuels can be considered:

- Fatty acid methyl esters as per DIN EN 14214 and ASTM D6751
- Distillate fuels with fatty acid methyl esters > 7% and max. 30% as per DIN EN 16734, DIN EN 16709 and ASTM D7467
- Distillate fuels with > 30% fatty acid methyl ester content

The following values must be maintained at the engine inlet (applies for transesterified bio-fuels/FAME and their mixtures with distillate fuels; it may not be possible to perform all analyses):

Property	Unit		Limit value	Standard[1)]
Kin. viscosity at 40°C[2)]	mm^2/s	Max.	11.00	ISO 3104, ASTM D7042, ASTM D445, DIN EN 16896
		Min.	2.000	
Density at 15°C	kg/m^3	Max.	900.0	ISO 3675, ISO 12185
		Min.	820.0	
Cetane index & cetane number	—	Min.	40	ISO 4264 & ISO 5165
Sulphur content[3)]	%(m/m)	Max.	1.00	ISO 8754, ISO 14596, ASTM D4294, DIN 51400-10
Flash point[4)]	°C	Min.	60.0	ISO 2719
Hydrogen sulphide	mg/kg	Max.	2.00	IP 570
Acid number	mg KOH/g	Max.	0.5	ASTM D664
Corrosion on copper	Class	Max.	1	ISO 2160

2025-07-03 - de

Non-standardised fuels

Non-standardised fuels

Property	Unit		Limit value	Standard[1)]
Oxidation stability[5)]	h	Min.	8 h (FAME content 70–100%) 15 h (FAME content 40–70%) 20 h (FAME content 7–40%)	EN 15751
Fatty acid methyl ester (FAME) content[6)]	% (V/V)	Max.	7.0–100%	ASTM D7963, IP 579, EN 14078
Carbon residue[7)]	%(m/m)	Max.	0.40	ISO 10370
Appearance	—	—	Clear and free from visible contamination	—
Water content	%(m/m)	Max.	0.20	DIN 51777, DIN EN 12937; ASTM D6304
Ash content	%(m/m)	Max.	0.010	ISO 6245
Total glycerine content	%(m/m)	Max.	0.25	EN 14105
Methanol content	%(m/m)	Max.	0.20	EN 14110
Monoglycerides	%(m/m)	Max.	0.70	EN 14110
Diglycerides	%(m/m)	Max.	0.20	EN 14110
Triglycerides	%(m/m)	Max.	0.20	EN 14110
Iodine value	%(m/m)	Max.	120	EN 14111
Linolenic acid methyl ester	%(m/m)	Max.	12	EN 14103
Polyunsaturated (> 4) fatty acids	%(m/m)	Max.	1.00	EN 15779
Alkali metals (Na+K)	%(m/m)	Max.	5.0	EN 14108
Alkaline earth metals	%(m/m)	Max.	5.0	EN 14538
Phosphorous content	%(m/m)	Max.	4.0	EN 14107
Lubricity[8)]	µm	Max.	520	ISO 12156-1; ASTM D6079

Remarks:

1) Always reference to the latest edition

2) Specific requirements of the injection system must be taken into account

3) Independent of the maximum permissible sulphur content, local laws and regulations must be adhered to

4) SOLAS specification. A lower flash point is possible for non-SOLAS-regulated applications

5) If there is more than 2% (V/V) FAME, an analysis as per EN 15751 is an additional requirement

6) The FAME must either comply with EN 14214 or with ASTM D6751

7) Determined at 10% distillation residue

8) Diameter of the corrected wear scar (WS)

Table 1: Specification for transesterified bio-fuel

The following values must be complied with at the engine inlet (does not apply for non-transesterfied bio-fuels):

Properties/features	Properties/unit	Testing method
Density at 15 °C	900–930 kg/m^3	DIN EN ISO 3675, EN ISO 12185

Non-standardised fuels

2025-07-03 - de

Properties/features	Properties/unit	Testing method
Flash point	> 60 °C	DIN EN 22719
Lower calorific value	> 35 MJ/kg (typically: 37 MJ/kg)	DIN 51900-3
Viscosity/50 °C	< 40 cSt (corresponds to viscosity/ 40 °C< 60 cSt)	DIN EN ISO 3104 ASTM D7042
Estimated cetane number	> 40	IP 541
Coke residue	< 0.4%	DIN EN ISO 10370
Sediment content	< 200 ppm	DIN EN 12662
Oxidation resistance (110 °C)	> 5 h	EN ISO 6886, EN 14112
Monoglyceride content	< 0.70% (m/m)	EN14105
Diglyceride content	< 0.20% (m/m)	EN14105
Triglyceride content	< 0.20% (m/m)	EN14105
Free glycerol content	< 0.02% (m/m)	EN14105
Phosphorus content	< 15 ppm	ASTM D3231
Na and K content	< 15 ppm	DIN 51797-3
Ash content	< 0.01%	DIN EN ISO 6245
Water content	< 0.5%	EN ISO 12537
Iodine number	< 125g/100g	DIN EN 14111
TAN (total acid number)	< 5 mg KOH/g	DIN EN ISO 660
Cold filter plugging point	10 °C below the lowest temperature in the fuel system	EN 116

Table 2: Specifications for non-interesterified bio fuel

⚠ WARNING

Handling of operating fluids

Handling of operating fluids can cause serious injury and damage to the environment.

- Observe safety data sheets of the operating fluid supplier.

Tests

Analysis of samples

To ensure sufficient cleaning of the fuel via the separator, perform regular functional check by sampling up- and downstream of the separator.

Analysis of residual fuel samples is essential for safe engine operation. We can analyse fuel for customers at the Everllence laboratory PrimeServLab.

To guarantee the safety of the crew and to obtain a representative sample, sampling must take place in accordance with valid Everllence operating instructions.

Non-standardised fuels

2025-07-03 - de

Non-standardised fuels

This page is intentionally left blank

2025-07-03 - de

Description for biofuels

Biofuels

Biofuels are similar to diesel and gasoline fuels in many parameters. They can be used in combustion engines with relatively simple adaptation measures to the engine parameters.

MAN ES four-stroke small bore has many engines in service running on various biofuels with excellent operation experience.

Liquid biofuels used in MAN 4-stroke small bore engines

Several types of liquid biofuels have already been tested on engines:

Non-transesterified biofuel

From a chemical point of view vegetable oil and animal fat are of the same composition. These are large molecules based on three fatty acids bound to glycerin. The viscosity is typically more in the range of heavy fuel oil and much higher compared to diesel fuel. Dependent on the fatty acids such fuels can have a quite high pour point. Similar to HFO is preheating required to achieve the injection viscosity.

Critical components in such fuels can be acids (from free fatty acids) causing corrosion in the fuel system. This must be controlled by keeping the TAN (total acid number) in a specified limit. Besides acids such fuels can contain gums. These components can cause deposits in the fuels system. Limitations for the phosphorus content and the carbon residue shall avoid such issues.

Long storage is not recommended as such fuels are sensitive to microbiological degeneration.

- Findings on engines with non-transesterified biofuel:
  - Blockage of leakage system. Trace heating necessary
  - Increased built up of deposits within combustion chamber and exhaust gas system
  - Reduction in maximum power output
  - Increased wear on parts of the injection system may influence the TBO.

Transesterified biofuel – FAME (fatty acid methyl ester)

Specifications like EN 14214 ensure high quality of FAME fuels. It is important to know that the energy content is significantly lower compared to diesel fuel. Depending on the engine type the maximum output of the engine might be reduced. Long storage is not recommended as such fuels are sensitive to microbiological degeneration.

Fuels not complying with EN 14214 are regularly offered on the market. Such fuels still contain a significant amount of glycerin components and have a higher tendency to build up deposit in the fuel system.

- Findings on engines with transesterified biofuel:
  - - Reduced engine load
  - - Deposits within fuel oil filters
  - - Increased wear on parts of the injection system may influence the TBO.

2025-03-18 - en

FAME diesel fuels from four different feedstock on a Medium Speed Single Cylinder Engine were investigated. Additionally two blended fuels were tested. The FAME content within the fuel influences the emission behavior, as the figure shows for the nominal load point. With increasing FAME content the NOx emissions remain constant compared to HFO.

A significant decrease of the soot emissions was observed (see Figure 1).

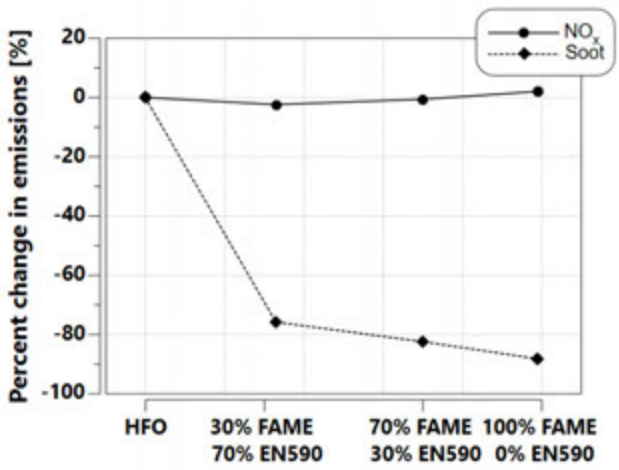

Figure 1: Emission behavior with FAME.

Diagrams in Figure 2 show the NOx and soot emission trends for FAME fuels and blends compared to DMA (MGO) as reference. With increasing FAME-content, a slight increase of the NOx emissions was observed. For all investigated B100 fuels an increase below 10% of the NOx emissions and a significant reduction (up to 50%) of the soot emissions, compared to DMA, was measured.

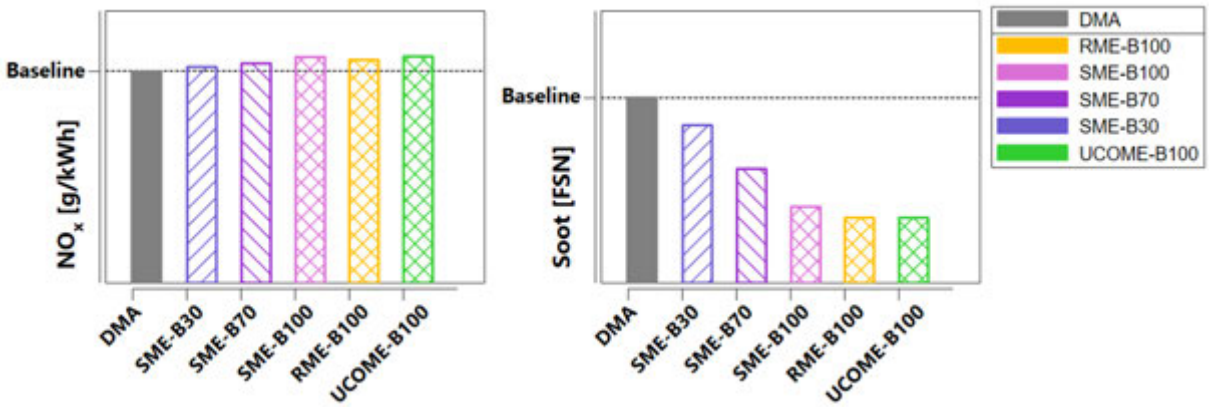

Figure 2: NOx and soot emission trends

HVO (hydrogenated vegetable oil)

HVO (hydrogenated vegetable oil) can be produced from the same base stock like the other fuels mentioned (vegetable oil, cooking oil, animal fat) but in a completely different process. HVO is derived by treatment with hydrogen resulting in a fuel that is chemically quite similar to high performance diesel fuel, consisting of pure hydrocarbons. HVO is comparable to synthetic diesel fuel like GtL. Compared to fossil diesel fuel HVO contains hardly any aromatic components causing very good combustion properties.

2025-03-18 - en

Although the energy content (per mass) is higher compared to fossil diesel the volumetric energy content is lower, caused by a low density. This can reduce the maximum possible output of the engine. Similar to distillate, then be aware of viscosity due to increasing temperature with fuel circulating over engine. Fuel cooler will be needed in the fuel string.

To comply with the regular fuel specifications like ISO 8217 or EN 590 and to ensure sufficient lubricity of the fuel, the supplier could possible add lubricity additives.

- Findings on engines with HVO:
  - First tests with HVO show significant improvements in emissions compared to HFO operation. NOx emissions are reduced by up to 29%, SOx emissions by almost 100%, and particle matters by up to 72% compared to HFO operation.
  - Observed leakages due to the lower viscosity of the fuel is in the same range as with MGO, load stability in the lower operating range is comparable to HFO, even slightly better.

Operation with biofuel

Please contact MAN Energy Solutions at an early stage of project.

Requirements on plant side

Biofuel has to be divided into 3 categories.

Category 1

Transesterified biofuel

For example:

- Biodiesel (FAME)

Esterified biofuel is comparable to MDO (ISO-F-DMB/ ISO-F-DMC), therefore standard layout of fuel oil system for MDO-operation to be used.

Category 2

Non-transesterified biofuel and pour point below 20°C

For example:

- Vegetable oil
- Rape-seed oil

Non-transesterified biofuel with pour point below 20°C is comparable to HFO (ISO-F-RM), therefore standard layout of fuel oil system for HFO-operation to be used.

Category 3

Non-transesterified biofuel and pour point above 20° C

For example:

- Palm oil
- Stearin
- Animal fat
- Frying fat

⚠ CAUTION Non-transesterified biofuel with a pour point above 20° C carries a risk of flocculation and may clog up pipes and filters unless special precautions are taken.

2025-03-18 - en

Therefore the standard layout of fuel oil system for HFO-operation has to be modified concerning following aspects:

- In general no part of the fuel oil system must be cooled down below pour point of the used biofuel.
- Fuel cooler for circulation fuel oil feeding part => to be modified.
  In this circuit a temperature above pour point of the biofuel is needed without overheating of the supply pumps.
- Sensor pipes to be isolated or heated and located near to main pipes.
- To prevent injection nozzles from clogging indicator filter size 0.010 mm has to be used instead of 0.034 mm.

Additionally

- Fuel oil module to be located inside plant (to be protected against rain and cold wind).
- A second fuel type has to be provided of category 1 or 2.
  Due to the risk of clogging it is needed before each stop of the engine, to change over to a second fuel type of category 1 or 2 and to operate the engine until the danger of clogging of the fuel oil system no longer exists.

Requirements on engine

- Injection pumps with special coating and with sealing oil system.
- Fuel pipes and leak fuel pipes must be equipped with heat-tracing (not to be applied for biofuel category 1). Heat-tracing to be applied for biofuel category 2 outside covers of injection pump area and for biofuel category 3 also inside injection pump area.
- Nozzle cooling to be applied for biofuel category 2 and 3.
- Charge air temperature before cylinder 55° C to minimize ignition delay.

Please be aware

- Depending on the quality of the biofuel, it may be necessary to carry out one oil change per year (this is not taken into account in the details concerning lubricating oil consumption).
- An addition to the fuel oil consumption is necessary:
  2 g/kWh addition to fuel oil consumption (see chapter fuel oil consumption)
- Engine operation with fuels of low calorific value like biofuel, requires an output reduction:
  - LCV ≥ 38 MJ/kg Power reduction 0%
  - LCV ≥ 36 MJ/kg Power reduction 5%
  - LCV ≥ 35 MJ/kg Power reduction 10%

Gaseous biofuels used in engines

Biogas

Biogas is a gas mixture produced by the natural decomposition of organic material in the absence of air and is produced naturally or as part of an industrial process to intentionally produce biogas as a fuel. The methane number value of the used biogas must be in accordance with the MAN ES gas specification for gaseous fuels.

- Findings on engines with biogas:
  - The use of biogas has been tested successfully on our engines without any limitations in operation. Compared to LNG or SNG biogas may have an influences to the lifetime of engine components.
  - Increased wear on parts of the injection system may influence the TBO.

2025-03-18 - en

Synthetic natural gas (SNG)

SNG is similar to natural gas produced from organic material such as coal, propane or biomass (biomethane). MAN ES has tested the world's first container ship to run on climate-neutral liquefied synthetic natural gas (SNG). With this project.

- Findings on engines with SNG:
  - Measurements on the mentioned vessel have shown that the greenhouse gas emissions with blended proportion of synthetic natural gas were 27% lower compared to operation with conventional LNG.

    Compared with HFO, the reduction in emissions was even around 34%.
  - With straight SNG operation, it is expected to cut CO2-emissions by up to 80%.

Implications on engines with the use of biofuels

The different calorific values of biofuels have a significant impact on engine efficiency due to their different ignition and combustion capabilities. Therefore we would like to remind you on the standard test method IP541/06, described in our PCI 398 from December 2018:

PCI No. 398
- Possible impacts of the IMO 2020 Sulphur Cap on four stroke engines (Dec. 2018)

This method enables an index called the estimated cetane number (ECN). Figure 3 shows the recommended operational reference ranges for the ECN parameter. Critical is a fuel with an ECN less than 20, especially in the low-load range.

Figure 3: ECN operational reference ranges (CIMAC Fuel quality guide 2011)

This page is intentionally left blank

Crude oil specification

Crude oil

Crude oil is a naturally occurring flammable liquid consisting of a complex mixture of hydrocarbons of various molecular weights and other liquid organic compounds, that are found in geologic formations beneath the Earth's surface.

The flash point of crude oil is low, typically below ambient temperature.

Our four-stroke medium-speed engines are well proven in operation on crude oil taken directly from oil wells and conditioned on site.

Exploiting crude oil to feed the large consumers involved in oil and gas exploration and production is both an economical solution and saves the considerable CO_2 emissions involved in the refining of distillate fuels and their transport via pumping stations from and to the oil field.

Properties/Characteristics	Unit	Limit	Test method
Viscosity, before injection pumps, min.	cSt	3	
Viscosity, before injection pumps, max.	cSt	18	
Viscosity @ 50°C, max.	cSt	700	ISO 3104
Density @ 15°C, max.	kg/m^3	1010.0	ISO 3675 or ISO 12185
CCAI, max.	–	870	ISO 8217
Water before engine, max.	% volume	0.2	ISO 3733
Sulphur, max.	% mass	4.5	ISO 8754 or ISO 14596
Ash, max.	% mass	0.15	ISO 6245
Vanadium, max.	mg/kg	600	ISO 14597 or IP 501 or IP 470
Sodium + Potassium before engine, max.	mg/kg	1/3 Vanadium content	ISO 10478
Aluminium + Silicon before engine, max.	mg/kg	15	ISO 10478 or IP 501 or IP 470
Carbon residue, max.	% mass	20	ISO 10370
Asphaltenes, max.	% mass	2/3 of carbon residue (according to Conradson)	ASTM D3279
Reid vapour pressure (RVP), max.	kPa @ 37.8°C	65	ASTM D323
Lubricity (wear scar diameter)	µm	< 520	ISO 12156-1
Pour point, max.	°C	30	ISO 3016
Cold filter plugging point	°C	Minimum 10° C below the lowest temperature in the entire fuel system	IP 309
Total sediment potential, max.	% mass	0.10	ISO 10307-2
Hydrogen sulphide, max.	mg/kg	2	IP 570
AN (acid number), max.	mg KOH/g	2.5	ASTM D664

Table 1: Crude oil - specifications.

2025-10-13 - en

3700246-2.1

Crude oil specification

Description

2025-10-13 - en

Viscosity-temperature diagram (VT diagram)

Explanations of viscosity-temperature diagram

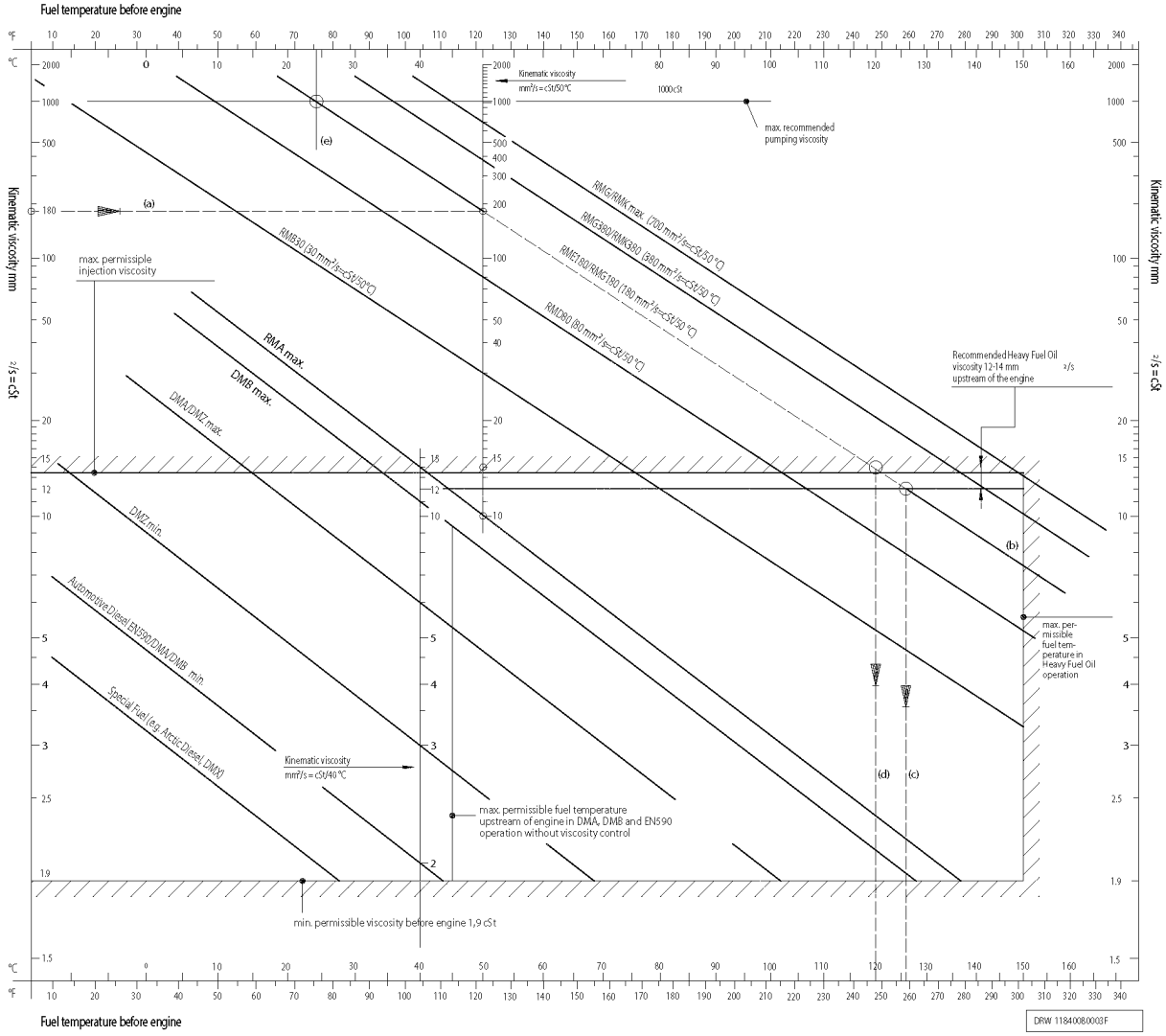

Figure 1: Viscosity-temperature diagram (VT diagram)

In the diagram, the fuel temperatures are shown on the horizontal axis and the viscosity is shown on the vertical axis.

The diagonal lines correspond to viscosity-temperature curves of fuels with different reference viscosities. The vertical viscosity axis in mm²/s (cSt) applies for 40, 50 or 100 °C.

Determining the viscosity-temperature curve and the required preheating temperature

Example: residual fuel with 180 mm²/s at 50°C

Prescribed injection viscosity in mm²/s	Required fuel temperature at the engine inlet[1)] in °C
≥ 12	126 (line c)
≤ 14	119 (line d)

Viscosity-temperature diagram (VT diagram)

2023-02-09 - de

Prescribed injection viscosity in mm²/s	Required fuel temperature at the engine inlet[1] in °C
[1] For these figures, the temperature drop from the last pre-heating device to the fuel injection pump is not taken into account.	

Table 1: Determining the viscosity temperature trend and the required pre-heating temperature

Viscosity-temperature diagram (VT diagram)

2023-02-09 - de

Guidelines regarding operation on low sulphur fuel oil

General

Exhaust emissions from marine diesel engines have been the focus of recent legislation. Apart from nitrous oxides (NOx), sulphur oxides (SOx) are considered to be the most important pollution factor. A range of new regulations have been implemented and others will follow (IMO, EU Directive, and CARB). These regulations demand reduction of SOx emissions by restricting the sulphur content of the fuel. That is to say sulphur limits for HFO as well as mandatory use of low sulphur distillate fuels for particular applications. This guideline covers the engine related aspects of the use of such fuels.

Low sulphur HFO (LSFO)

From an engine manufacturer's point of view there is no lower limit for the sulphur content of HFO. We have not experienced any trouble with the currently available LSFO, that are related to the sulphur content or specific to LSFO. This may change in the future if new methods are applied for the production of LSFO (desulphurization, uncommon blending components). MAN Energy Solutions will monitor developments and inform our customers if necessary.

If the engine is not operated permanently on LSFO, then the lubricating oil should be selected according to the highest sulphur content of the fuels in operation.

Low sulphur distillates

In general our engines are developed for continuous operation on HFO as well as on MDO/MGO. Occasionally changes in operation mode between HFO and MDO/MGO are considered to be within normal operation procedures for our engine types and do thus not require special precautions.

Running on low sulphur fuel (< 0.1% S) will not cause problems, but please notice the following restrictions:

In order to avoid seizure of the fuel oil injection pump components the viscosity at engine fuel oil inlet must be > 2 cSt. In order achieve this it may be necessary to install a fuel oil cooler, when the engine is running on MGO. This is both to ensure correct viscosity and avoid heating up the service tank, which is important as the fuel oil injection pumps are cooled by the fuel.

When operating on MDO/MGO a larger leak oil amount from fuel oil injection pumps and fuel oil injection valves can be expected compared to operation on HFO.

In order to carry out a quick change between HFO and MDO/MGO the change over should be carried out by means of the valve V1-V2 installed in front of the engine.

For the selection of the lubricating oil the same applies as for HFO. For temporary operation on distillate fuels including low sulphur distillates nothing has to be considered. A lubricating oil suitable for operation on diesel fuel should only be selected if a distillate fuel is used continuously.

2025-03-18 - en

This page is intentionally left blank

2025-03-18 - en

Aging curve

Aging curve

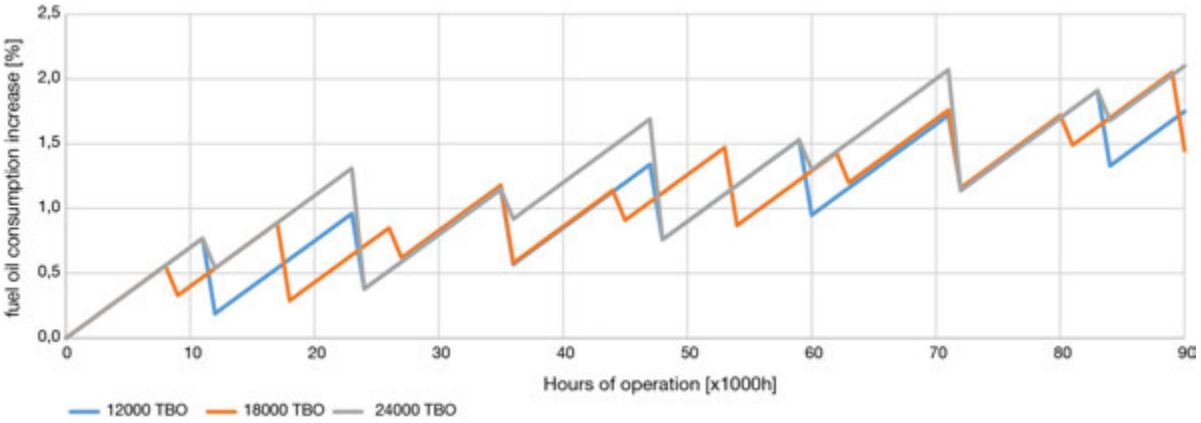

Figure 1: Aging curve

Fuel consumption are the highest contributor to OPEX (Operating Expenses) and are mostly related to maintenance, daily/weekly service and proper investment in external equipment for fuel oil and lubricating oil treatment. *Please see fig 2 of the "Vicious circle"*.

MAN Energy Solutions Project-Guide and Instruction Manual have several pages explaining the best installation and service based on several decades of experience, continuous development and adaption to the market situation. The guided values for TBO are achievable based on the best handling of the engine.

Even with the best maintenance then aging of engine, layers on parts for turbo/charge air cooler, wear and tear of components, will have a consequence on fuel consumption. Because fuel consumption is the highest contributor to OPEX it can sometimes be advisable to have the TBO before engine limit. As all engines are continuous developed and updated it is recommendable to order original spares and with that get the newest update for lower fuel consumption. There are also distributed number of Service Letters with newest update and experience.

Consult MAN-PrimeServ for guidance both for new buildings, normal service and changes in operation.

2025-03-18 - en

Figure 2: Vicious circle

2025-03-18 - en

Calculation of specific fuel oil consumption (SFOC)

General

Figure describes the standardized calculation order for conversion of SFOC from Reference condition (ISO) to Site/FAT condition, and from Site/FAT condition to Reference condition (ISO).

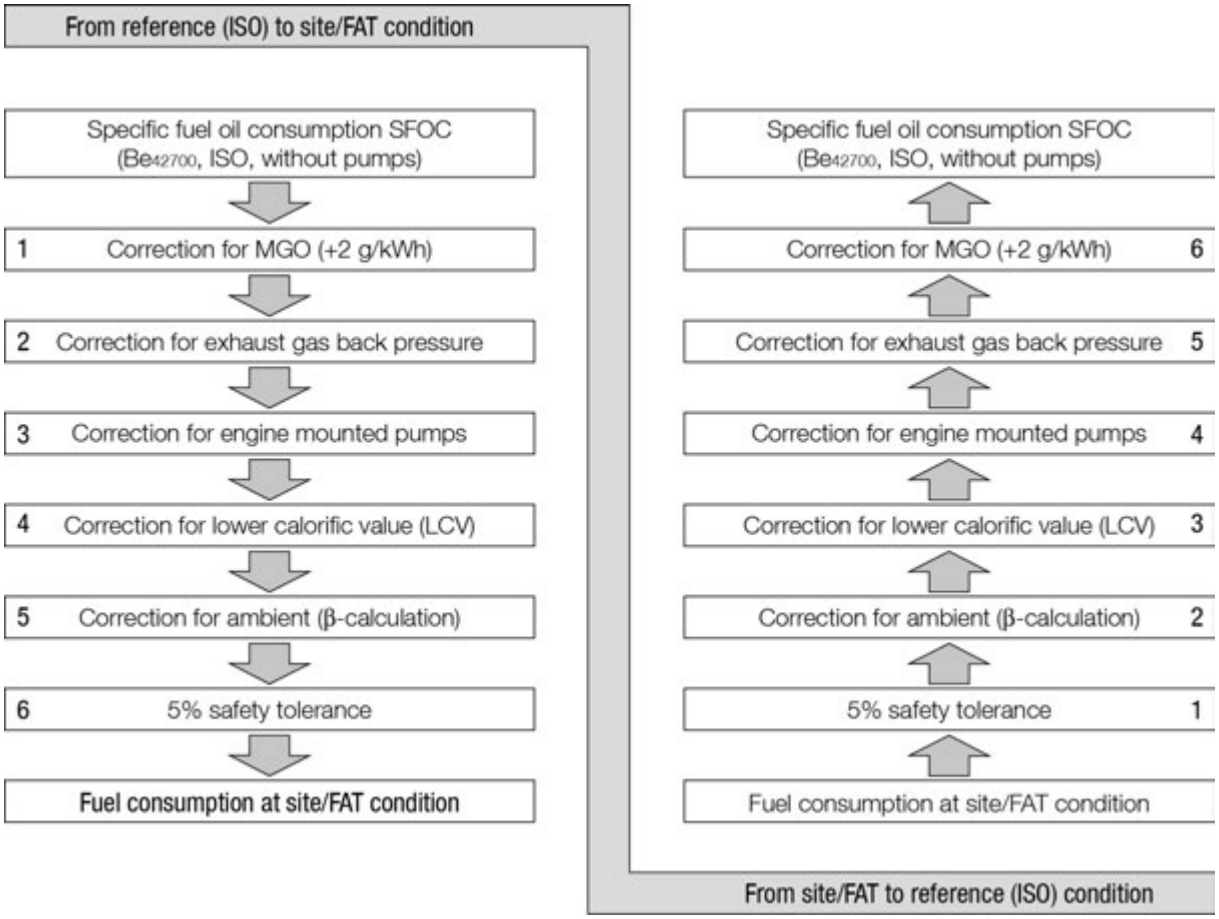

Following description is focussed on how to calculate a conversion from site/FAT condition to reference condition ISO.

2025-06-20 - en

Fuel consumption (kg/h):

Fuel oil consumption is measured by a measuring tank. Recommended is that a recently calibrated electronic weight is measuring the fuel consumption. Measuring time should minimum have duration of 10 minutes. Values are stated in kg/h.

The leakage oil (kg/h) is measured over minimum 10 min and subtracted from measured fuel consumption.

$$BeO = (\textit{Fuel oil}) - (\textit{Leak oil})$$

Leak oil

Please find below diagram for different engine types running on MGO.

The mentioned values are measured under controlled condition on a test bed using new fuel injection pump / fuel injection valve, and taking into consideration that temperature, viscosity, clearance, oil condition, oil quality etc can differ and thereby affect the leak oil amount.

Tolerance of the values is +/-25%.

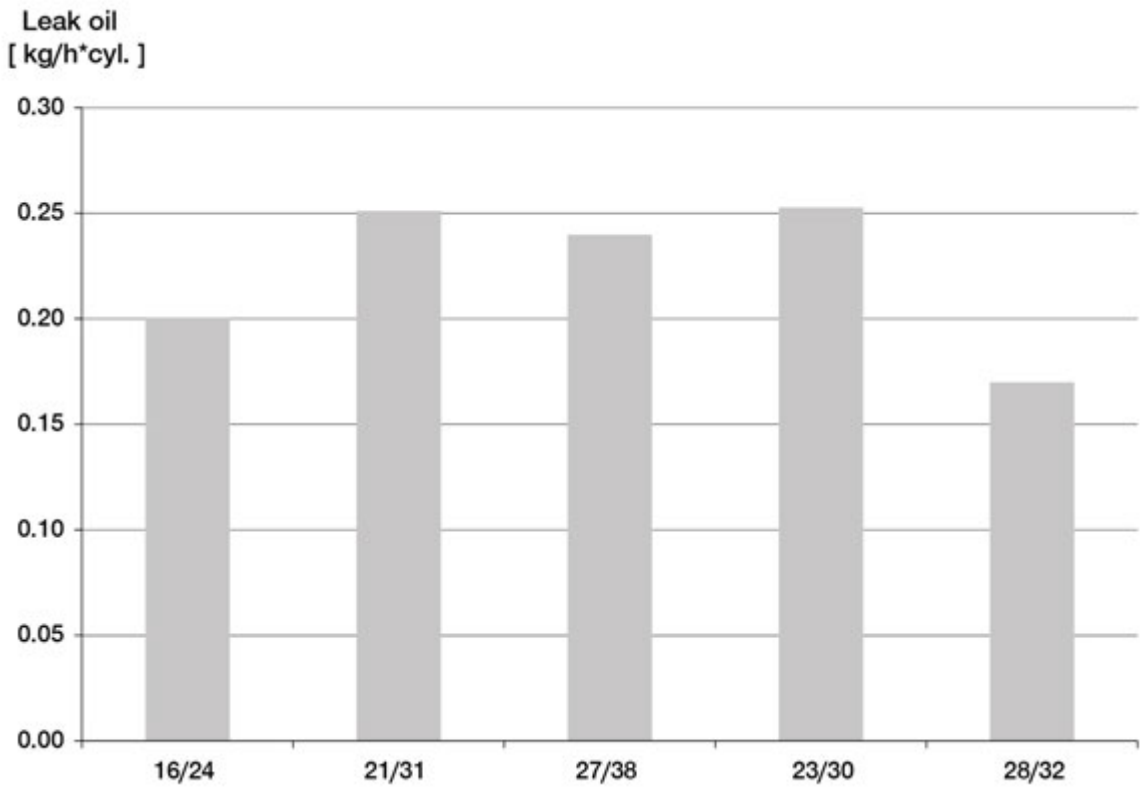

Figure 1: Leak oil on full load for MGO operation (for guidance only)

2025-06-20 - en

1) Safety tolerance 5%

Safety tolerance 5% is subtracted from fuel consumption

$$Be1 = \frac{Be0}{1 + (SFOC\ tolerance/100)}$$

2) Correction for ambient (β-calculation)

In accordance to ISO-Standard ISO 3046-1:2002 *"Reciprocating internal combustion engines – Performance, Part 1: Declarations of power, fuel and lubricating oil consumptions, and test methods – Additional requirements for engines for general use"* MAN Diesel & Turbo specifies the method for recalculation of fuel consumption dependent on ambient conditions for 1-stage turbocharged engines as follows:

$$\beta = 1 + 0.0006 \times (t_x - t_r) + 0.0004 \times (t_{bax} - t_{bar}) + 0.07 \times (p_r - p_x)$$

The formula is valid within the following limits:

+ Ambient air temperature	5°C – 55°C
+ Charge air temperature before cylinder	25°C – 75°C
+ Ambient air pressure	0.885 bar – 1.030 bar

$$Be2 = \frac{Be1}{\beta}$$

β Fuel consumption factor

t_{bar} Engine type specific reference charge air temperature before cylinder, see »Reference conditions« in »*Fuel oil consumption for emissions standard*«.

Legend		Reference	Site/FAT
Specific fuel consumption	[g/kWh]	b_r	b_x
Ambient air temperature	[°C]	t_r	t_x
Charge air temperature before cylinder	[°C]	t_{bar}	t_{bax}
Ambient air pressure	[bar]	p_r	p_x

Example

Reference values:

br = 200 g/kWh, tr = 25°C, tbar = 40°C, pr = 1.0 bar

At site:

t_x = 45°C, t_{bax} = 50°C, p_x = 0.9 bar

ß = 1+ 0.0006 (45 – 25) + 0.0004 (50 – 40) + 0.07 (1.0 – 0.9) = 1.023

2025-06-20 - en

$b_x = ß \times b_r = 1.023 \times 200 = 204.6$ g/kWh

3) Correction for lower calorific value (LCV)

Whenever LCV value rise 427 kJ/kg the SFOC will be reduced with 1%

$$LCV\,f = \frac{LCV}{42700}$$

$$Be3 = Be2 * LCV\,f$$

4) Correction for engine mounted pumps

Engine type
16/24, 27/38

With built-on pumps, the SFOC will be increased in [%] by:

Lubricating oil main pump	$1.2 \times \left(\frac{110}{load\ \% + 10}\right)$ %
LT Cooling water pump	$0.7 \times \left(\frac{110}{load\ \% + 10}\right)$ %
HT Cooling water pump	$0.7 \times \left(\frac{110}{load\ \% + 10}\right)$ %

Engine type
21/31

Lubricating oil main pump	$1.13 \times \left(\frac{110}{load\ \% + 10}\right)$ %
LT cooling water pump	$0.93 \times \left(\frac{110}{load\ \% + 10}\right)$ %
HT cooling water pump	$0.93 \times \left(\frac{110}{load\ \% + 10}\right)$ %

6, 7, 8, 9 cyl. engine

Lubricating oil main pump	$1.10 \times \left(\frac{110}{load\ \% + 10}\right)$ %
LT cooling water pump	$0.71 \times \left(\frac{110}{load\ \% + 10}\right)$ %
HT cooling water pump	$0.71 \times \left(\frac{110}{load\ \% + 10}\right)$ %

Engine type
23/30, 28/32

With built-on pumps, the SFOC will be increased in [%] by:

Lubricating oil main pump	$0.5 \times \left(\frac{110}{load\ \% + 10}\right)$ %
LT Cooling water pump	$0.7 \times \left(\frac{110}{load\ \% + 10}\right)$ %
HT Cooling water pump	$0.7 \times \left(\frac{110}{load\ \% + 10}\right)$ %

2025-06-20 - en

$$Be4 = \frac{Be3}{1 + LO\,f + LT\,f + HT\,f}$$

5) Correction for exhaust gas back pressure

Increased negative intake pressure before compressor leads to increased fuel oil consumption, calculated as increased air temperature before turbocharger:

$U = (-20\ [mbar] - p_{Air\ before\ compressor}\ [mbar]) \times 0.25\ [K/mbar]$ with $U \geq 0$

Increased exhaust gas back pressure after turbine leads to increased fuel oil consumption, calculated as increased air temperature before turbocharger:

$O = (p_{Exhaust\ after\ turbine}\ [mbar] - 30\ [mbar]) \times 0.25\ [K/mbar]$ with $O \geq 0$

Charge air blow-off for exhaust gas temperature control (ex. plants with catalyst) leads to increased fuel oil consumption:
For every increase of the exhaust gas temperature by 1° C, due to activation of charge air blow-off device, an addition of 0.05 g/kWh to be considered.

6) Correction for MGO (+2 g/kWh)

When engine is running MGO the fuel consumption can be increased by up to +2 g/kWh due to lower energy content and longer injection duration.

SFOC can in some case also be reduced by inverted fuel values of MGO.

2025-06-20 - en

This page is intentionally left blank

Fuel oil consumption for emissions standard

5-8L23/30H: 130 kW/cyl. at 720 rpm

% Load	100	85[1)]	75	50	25
Spec. fuel consumption (g/kWh) with HFO/ MDO without attached pumps [2) 3)]	194	193[1)]	192	196	217

[1)] Fuel consumption at 85% MCR
[2)] Tolerance for +5%. Please note that the additions to fuel consumption must be considered before the tolerance is taken into account.
[3)] Based on reference conditions, *see "Reference conditions" Table 5*

Table 1: Fuel oil consumption.

5-8L23/30H: 135 kW/cyl. at 750 rpm

% Load	100	85[1)]	75	50	25
Spec. fuel consumption (g/kWh) with HFO/ MDO without attached pumps [2) 3)]	195	193[1)]	192	196	218

[1)] Fuel consumption at 85% MCR
[2)] Tolerance +5%. Please note that the additions to fuel consumption must be considered before the tolerance is taken into account.
[3)] Based on reference conditions, *see "Reference conditions" Table 5*

Table 2: Fuel oil consumption.

6-8L23/30H: 160 kW/cyl. at 900 rpm

% Load	100	85[1)]	75	50	25
Spec. fuel consumption (g/kWh) with HFO/ MDO without attached pumps [2) 3)]	196	195[1)]	194	198	224

[1)] Fuel consumption at 85% MCR
[2)] Tolerance +5%. Please note that the additions to fuel consumption must be considered before the tolerance is taken into account.
[3)] Based on reference conditions, *see "Reference conditions" Table 5*

Table 3: Fuel oil consumption.

No of cylinders	Fuel oil consumption at idle running (kg/h)			
	5L	6L	7L	8L
Speed 720/750/900 rpm	-	-	-	-

Table 4: Fuel oil consumption at idle running

2018-04-20 - en

All data provided in this document is non-binding and serves informational purposes only. Depending on the subsequent specific individual projects, the relevant data may be subject to changes and will be assessed and determined individually for each project. This will depend on the particular characteristics of each individual project, especially specific site and operational conditions.

2018-04-20 - en

IMO Tier II requirements

IMO: International Maritime Organization MARPOL 73/78; Revised Annex VI-2008, Regulation 13.

Tier II: NO_x technical code on control of emission of nitrogen oxides from diesel engines.

Note! *Operating pressure data without further specification are given below/ above atmospheric pressure.*

For calculation of fuel consumption, *see "B 11 00 0 Recalculation of fuel oil consumption dependent on ambient conditions".*

Reference conditions

Reference conditions (according to ISO 3046-1: 2002; ISO 1550: 2002)		
Air temperature before turbocharger t_r	°C	25
Ambient pressure p_r	bar	1
Relative humidity Φr	%	30
Engine type specific reference charge air temperature before cylinder t_{bar} [1)]	°C	34
Net calorific value NCV	kJ/kg	42,700
[1)] Specified reference charge air temperature corresponds to a mean value for all cylinder numbers that will be achieved with 25° C LT cooling water temperature before charge air cooler (according to ISO)		

Table 5: Reference conditions.

For operation with MGO SFOC will be increased by 2 g/kWh

With built-on pumps, the SFOC will be increased in [%] by:

Lub. oil main pump $0.5 \times \left(\frac{110}{\text{load \%} + 10} \right)$ %

LT Cooling water pump $0.7 \times \left(\frac{110}{\text{load \%} + 10} \right)$ %

HT Cooling water pump $0.7 \times \left(\frac{110}{\text{load \%} + 10} \right)$ %

For different net calorific value, the SFOC is to be corrected [in %] by:

Net calorific value NVC rise 427 kJ/kg - 1.0 %

2018-04-20 - en

All data provided in this document is non-binding and serves informational purposes only. Depending on the subsequent specific individual projects, the relevant data may be subject to changes and will be assessed and determined individually for each project. This will depend on the particular characteristics of each individual project, especially specific site and operational conditions.

Increased negative intake pressure before compressor leads to increased fuel oil consumption, calculated as increased air temperature before turbocharger:

$U = (-20\ [mbar] - p_{Air\ before\ compressor}\ [mbar]) \times 0.25\ [K/mbar]$ with $U \geq 0$

Increased exhaust gas back pressure after turbine leads to increased fuel oil consumption, calculated as increased air temperature before turbocharger:

$O = (p_{Exhaust\ after\ turbine}\ [mbar] - 30\ [mbar]) \times 0.25\ [K/mbar]$ with $O \geq 0$

Charge air blow-off for exhaust gas temperature control (plants with catalyst) leads to increased fuel oil consumption:
For every increase of the exhaust gas temperature by 1° C, due to activation of charge air blow-off device, an addition of 0.05 g/kWh to be considered.

2018-04-20 - en

All data provided in this document is non-binding and serves informational purposes only. Depending on the subsequent specific individual projects, the relevant data may be subject to changes and will be assessed and determined individually for each project. This will depend on the particular characteristics of each individual project, especially specific site and operational conditions.

MDO / MGO cooler

General

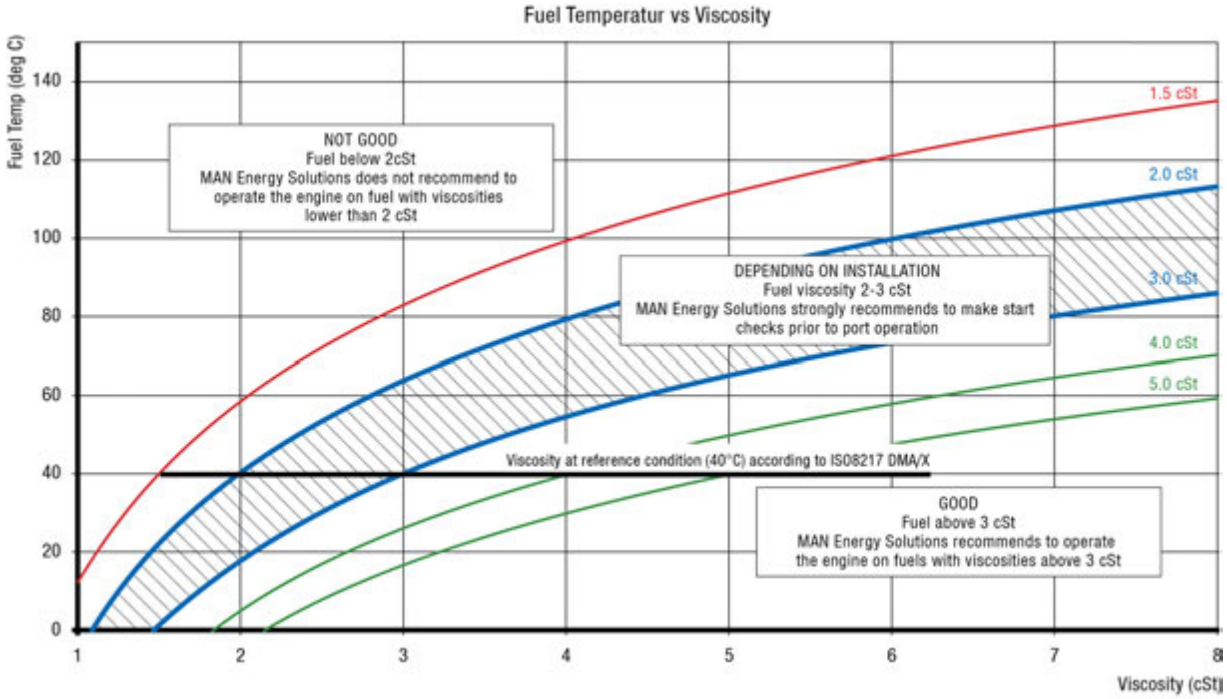

Figure 1: Fuel temperature versus viscosity.

In order to ensure a satisfactory hydrodynamic oil film between fuel injection pump plunger/barrel, thereby avoiding fuel injection pump seizures/sticking, MAN Energy Solutions recommends to keep a fuel oil viscosity at minimum 2.0 cSt measured at the engine inlet. This limit has been used over the years with good results and gives the required safety margin against fuel injection pump seizures.

For some MGO´s viscosities below 2.0 cSt may be reached at temperatures above 35°C. As the fuel temperature increases during operation, it is impossible to maintain this low temperature at the engine inlet without a MDO/MGO cooler.

In the worst case, a temperature of 60-65°C at the engine inlet can be expected corresponding to a viscosity far below 2.0 cSt. The consequence may be sticking fuel injection pumps or nozzle needles.

Also most pumps in the external system (supply pumps, circulating pumps, transfer pumps and feed pumps for the separator) already installed in existing vessels, need viscosities above 2.0 cSt to function properly.

We recommend that the actual pump maker is contacted for advice.

Installation of MDO/MGO cooler or MDO/MGO cooler and chiller

To be able to maintain the required viscosity at the engine inlet, it is necessary to install a MDO/MGO cooler in the fuel system (MDO/MGO cooler installed just before the engine).

2025-03-19 - en

The advantage of installing the MDO/MGO cooler just before the engine is that it is possible to optimise the viscosity regulation at the engine inlet. However, the viscosity may drop below 2.0 cSt at the circulating and other pumps in the fuel system.

The MDO/MGO cooler can also be installed before the circulating pumps. The advantage in this case is that the viscosity regulation may be optimised for both the engine and the circulating pumps.

It is not advisable to install the MDO/MGO cooler just after the engine or after the Diesel oil service tank as this will complicate viscosity control at the engine inlet. In case the MDO/MGO cooler is installed after the service tank, the supply pumps will have to handle the pressure drop across the MDO/MGO cooler which cannot be recommended.

The cooling medium used for the MDO/MGO cooler is preferably fresh water from the central cooling water system.

Seawater can be used as an alternative to fresh water, but the possible risk of MDO/MGO leaking into the sea water and the related pollution of the ocean, must be supervised.

The horizontal axis shows the bunkered fuel viscosity in cSt at 40°C, which should be informed in the bunker analysis report.

If the temperature of the MGO is below the upper blue curve at engine inlet, the viscosity is above 2.0 cSt. The black thick line shows the viscosity at reference condition (40°C) according to ISO8217, marine distillates.

Example: MGO with viscosity of 4.0 cSt at 40°C must have a temperature below 55°C at engine inlet to ensure a viscosity above 3.0 cSt.

Example: MGO with a viscosity of 5.0 cSt at 40°C is entering the engine at 50°C. The green curves show that the fuel enters the engine at approximately 4.0 cSt.

Example: MGO with a viscosity of 2.0 cSt at 40°C needs cooling to 18°C to reach 3.0 cSt.

The following items should be considered before specifying the MDO/MGO cooler :

- The flow on the fuel oil side should be the same as the capacity of the fuel oil circulating pump (see D 10 05 0, List of Capacities)
- The fuel temperature to the MDO/MGO cooler depends on the temperature of the fuel in the service tank and the temperature of return oil from the engine(s)
- The temperature of the cooling medium inlet to the MDO/MGO cooler depends on the desired fuel temperature to keep a minimum viscosity of 2.0 cSt
- The flow of the cooling medium inlet to the MDO/MGO cooler depends on the flow on the fuel oil side and how much the fuel has to be cooled

The frictional heat from the fuel injection pumps, which has to be removed, appears from the table below.

Engine type	kW/cyl.
L16/24, L16/24S	0.5
L21/31, L21/31 Mk1-1, L21/31S L21/31 Mk 2, L21/31DF-M	1.0
L27/38, L27/38S, L27/38 Mk2	1.5

2025-03-19 - en

Engine type	kW/cyl.
L23/30H, L23/30H Mk 2, L23/30H Mk 3, L23/30S	0.75
L23/30DF	0.75
L28/32H	1.0
L28/32DF	1.0
V28/32S	1.0

Based on the fuel oils available in the market as of June 2009, with a viscosity ≥ 2.0 cSt at 40°C, a fuel inlet temperature ≤ 40°C is expected to be sufficient to achieve 2.0 cSt at engine inlet *(see fig 1).*

In such case, the central cooling water / LT cooling water (36°C) can be used as coolant.

For the lowest viscosity MGO´s and MDO´s, a water cooled MGO/MGO cooler may not be enough to sufficiently cool the fuel as the cooling water available onboard is typically LT cooling water (36°C).

In such cases, it is recommended to install a so-called “Chiller” that removes heat through vapourcompression or an absorption refrigeration cycle *(see fig 2).*

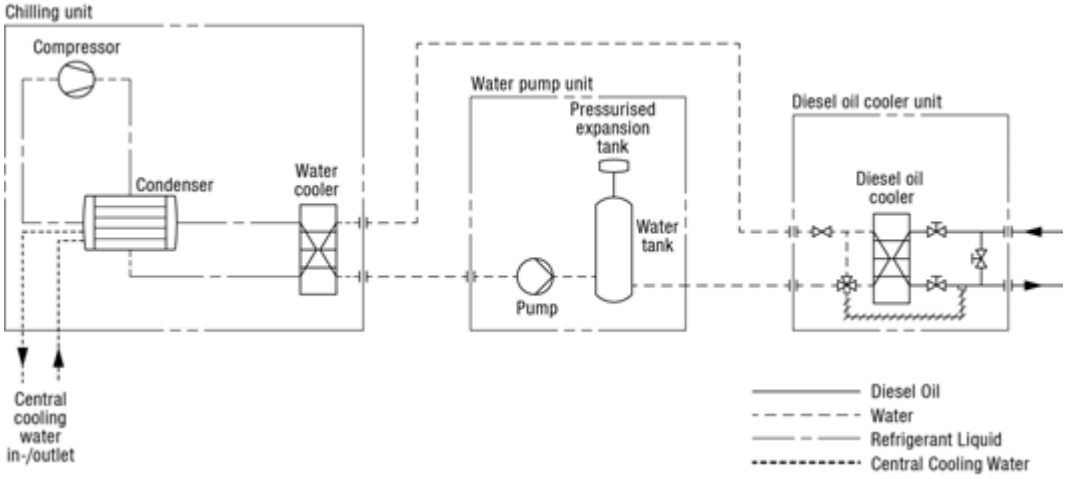

Figure 2: Chiller.

This page is intentionally left blank

2025-03-19 - en

HFO/MDO changing valves (V1 and V2)

Description

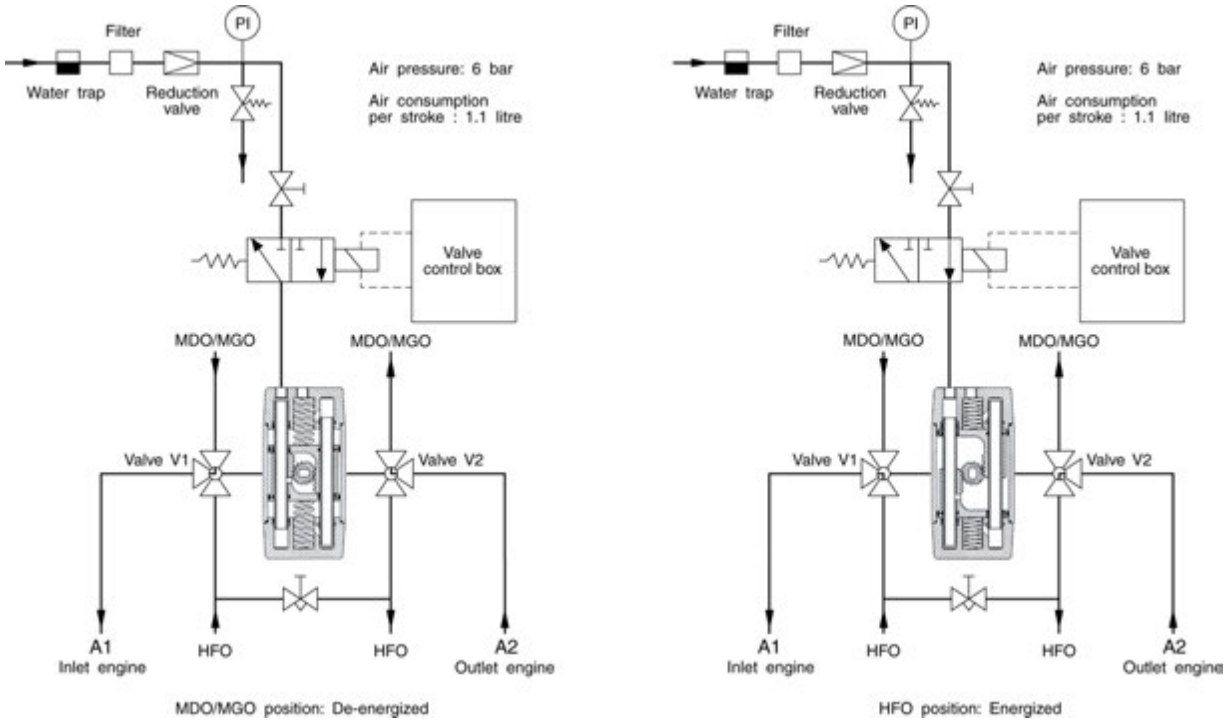

Figure 1: Pneumatic diagram for 3-way changing valves V1 & V2.

The fuel change-over system consists of two remote controlled and interconnected 3-way valves, which are installed immediately before each engine. The 3-way valves “V1-V2” are operated by an electrica/pneumatic actuator of the simplex type, with spring return and a common valve control box for all engines.

The flexibility of the system makes it possible, if necessary, to operate the engines on either diesel oil or heavy fuel oil, individually by means of the L-bored 3-way valves “V1-V2”.

The control box can be placed in the engine room or in the engine control room.

To maintain re-circulation in the HFO flow line, when the engine is operated on MDO, is a by-pass valve installed between the fuel inlet valve “V1” and the fuel outlet valve “V2” at each engine as shown in *fig 1.*

Valve control box

The electrical power supply to the valve control box is 3 x 400 Volt - 50 Hz, or 3 x 440 Volt - 60 Hz, depending on the plant specification, and is established in form of a single cable connection from the switchboard.

Due to a built-in transformer, the power supply voltage will be converted to a 24 V DC pilot voltage for serving the relays, contactors, and indication lamps.

2025-03-19 - en

Furthermore the 24 V DC pilot voltage is used for operating the fuel changing valves with an electrically/pneumatically operated actuator of the simplex type with spring return.

The mode of valve operation is:
HFO-position: Energized
MDO-position: De-energized

In the event of a black-out, or other situations resulting in dead voltage potential, will the remote controlled and interconnected 3-way valves at each engine be de-energized and automatically change over to the MDO/MGO-position, due to the built-in return spring. The internal piping on the engines will then, within a few seconds, be flushed with MDO/MGO and be ready for start up.

2025-03-19 - en

Automatic back-flush filter

Automatic back-flush filter

To protect the GenSets from foreign particles in the fuel (cat fines attack), must a common automatic back-flush filter be installed in the circulation line, just before the branching to the individual GenSets.

The automatic back-flush filter with a change-over cock and by-pass simplex filter and with integrated heating chamber, has a mesh size of 10 microns (absolute/sphere passing mesh).

The automatic back-flush filter permits a continuous operation even during back flushing without any pressure drops or interruptions of flow. If the filter inserts are clogged, an automatic cleaning is started. The filter is equipped with a visual differential pressure indication and two differential pressure contacts to monitor the clogging of the filter. Back flushing medium is discharged discontinuous to a sludge tank or back to the settling tank.

Filter specification

Range of application	:	Heavy fuel oil 700 cSt @ 50°C
Max. operating pressure	:	16 bar
Test pressure	:	According to class rule
Max. operating temperature	:	160°C
Nominal width of connection flanges	:	DN40, DN65, DN80, DN100 or DN125
Grade of filtration	:	10 microns (absolute/sphere passing mesh)
Cleaning	:	Sequential reverse-flow back-flushing, assisted by compressed air
Back-flushing control	:	Differential pressure-dependent or time-dependent
Pressure drop at clean filter	:	≤ 0.2 bar
Filter to be cleaned at a pressure drop	:	0.38 bar ± 10%
Alarm contact switches at differential pressure	:	0.5 bar ± 10%
Compressed air	:	4-10 bar

2023-08-30 - en

Specification L16/24

1000 rpm	Booster circuit				
Qty. engines	5L16/24	6L16/24	7L16/24	8L16/24	9L16/24
1	DN40	DN40	DN40	DN40	DN40
2	DN40	DN40	DN40	DN40	DN40
3	DN40	DN40	DN40	DN65	DN65
4	DN40	DN65	DN65	DN65	DN65

1200 rpm	Booster circuit				
Qty. engines	5L16/24	6L16/24	7L16/24	8L16/24	9L16/24
1	DN40	DN40	DN40	DN40	DN40
2	DN40	DN40	DN40	DN40	DN40
3	DN40	DN40	DN65	DN65	DN65
4	DN40	DN65	DN65	DN65	DN65

Specification L21/31 + Mk2

900 rpm	Booster circuit				
Qty. engines	5 cyl. engine	6 cyl. engine	7 cyl. engine	8 cyl. engine	9 cyl. engine
1	DN40	DN40	DN40	DN40	DN65
2	DN65	DN65	DN65	DN65	DN65
3	DN65	DN65	DN65	DN65	DN80
4	DN65	DN65	DN80	DN80	DN80

1000 rpm	Booster circuit				
Qty. engines	5 cyl. engine	6 cyl. engine	7 cyl. engine	8 cyl. engine	9 cyl. engine
1	DN40	DN40	DN40	DN40	DN65
2	DN65	DN65	DN65	DN65	DN65
3	DN65	DN65	DN65	DN65	DN80
4	DN65	DN65	DN80	DN80	DN80

2023-08-30 - en

Specification L27/38

720 rpm	Booster circuit				
Qty. engines	5L27/38	6L27/38	7L27/38	8L27/38	9L27/38
1	DN40	DN40	DN65	DN65	DN65
2	DN65	DN65	DN65	DN65	DN65
3	DN65	DN65	DN65	DN80	DN80
4	DN65	DN80	DN80	DN80	DN100

750 rpm	Booster circuit				
Qty. engines	5L27/38	6L27/38	7L27/38	8L27/38	9L27/38
1	DN40	DN40	DN65	DN65	DN65
2	DN65	DN65	DN65	DN65	DN65
3	DN65	DN65	DN65	DN80	DN80
4	DN65	DN80	DN80	DN80	DN100

Specification L23/30H + Mk2

720/750 rpm	Booster circuit			
Qty. engines	5 cyl. engine	6 cyl. engine	7 cyl. engine	8 cyl. engine
1	DN40	DN40	DN40	DN40
2	DN40	DN40	DN40	DN65
3	DN40	DN65	DN65	DN65
4	DN65	DN65	DN65	DN65

900 rpm	Booster circuit		
Qty. engines	6 cyl. engine	7 cyl. engine	8 cyl. engine
1	DN40	DN40	DN40
2	DN40	DN65	DN65
3	DN65	DN65	DN65
4	DN65	DN65	DN65

2023-08-30 - en

Specification L28/32H

720 rpm	Booster circuit				
Qty. engines	5L28/32H	6L28/32H	7L28/32H	8L28/32H	9L28/32H
1	DN40	DN40	DN40	DN40	DN40
2	DN40	DN65	DN65	DN65	DN65
3	DN65	DN65	DN65	DN65	DN65
4	DN65	DN65	DN65	DN65	DN80

750 rpm	Booster circuit				
Qty. engines	5L28/32H	6L28/32H	7L28/32H	8L28/32H	9L28/32H
1	DN40	DN40	DN40	DN40	DN40
2	DN40	DN65	DN65	DN65	DN65
3	DN65	DN65	DN65	DN65	DN65
4	DN65	DN65	DN65	DN65	DN80

2023-08-30 - en

DN40 - Typ 6.72.1

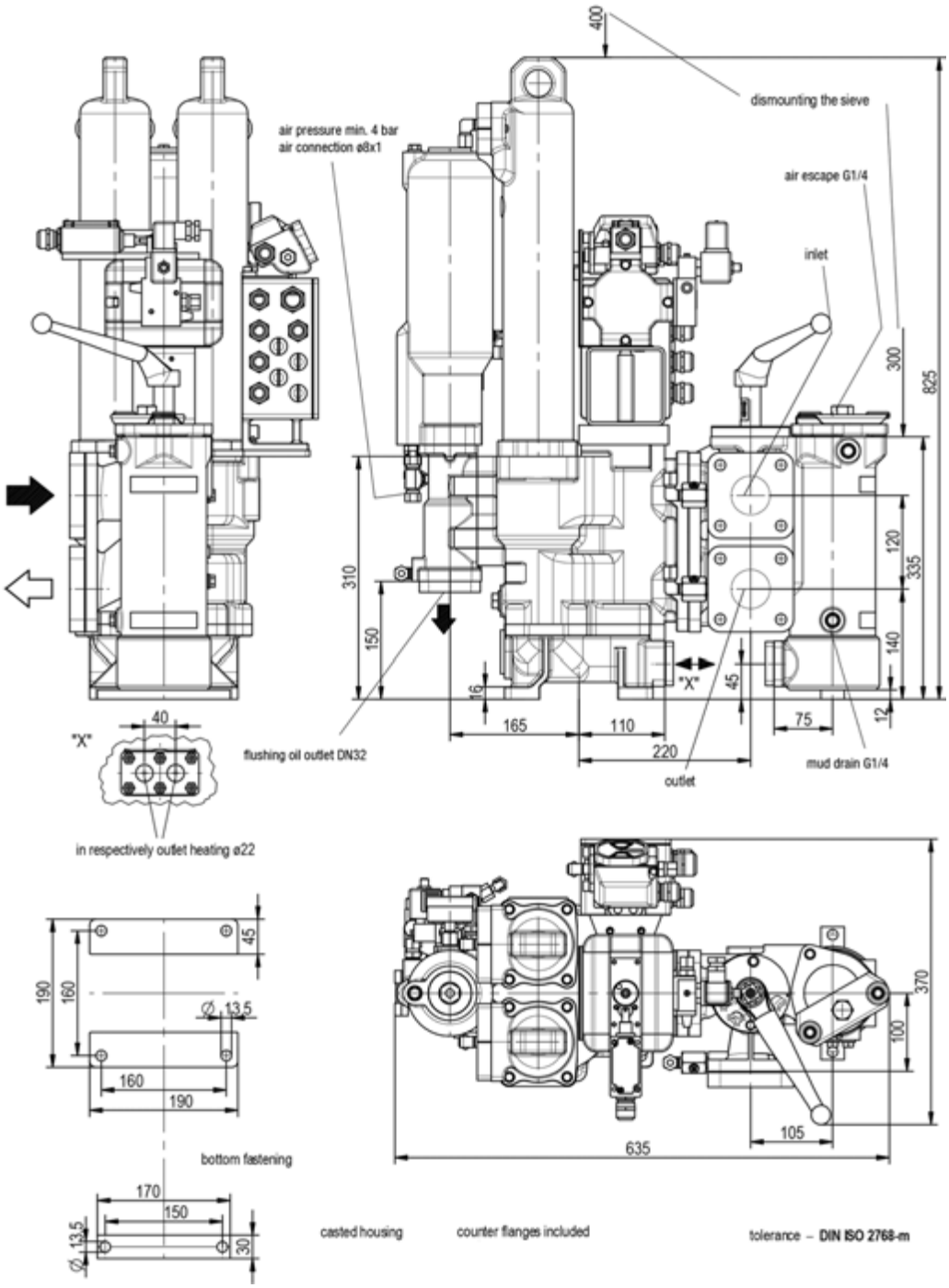

DN65 - Typ 6.72.1

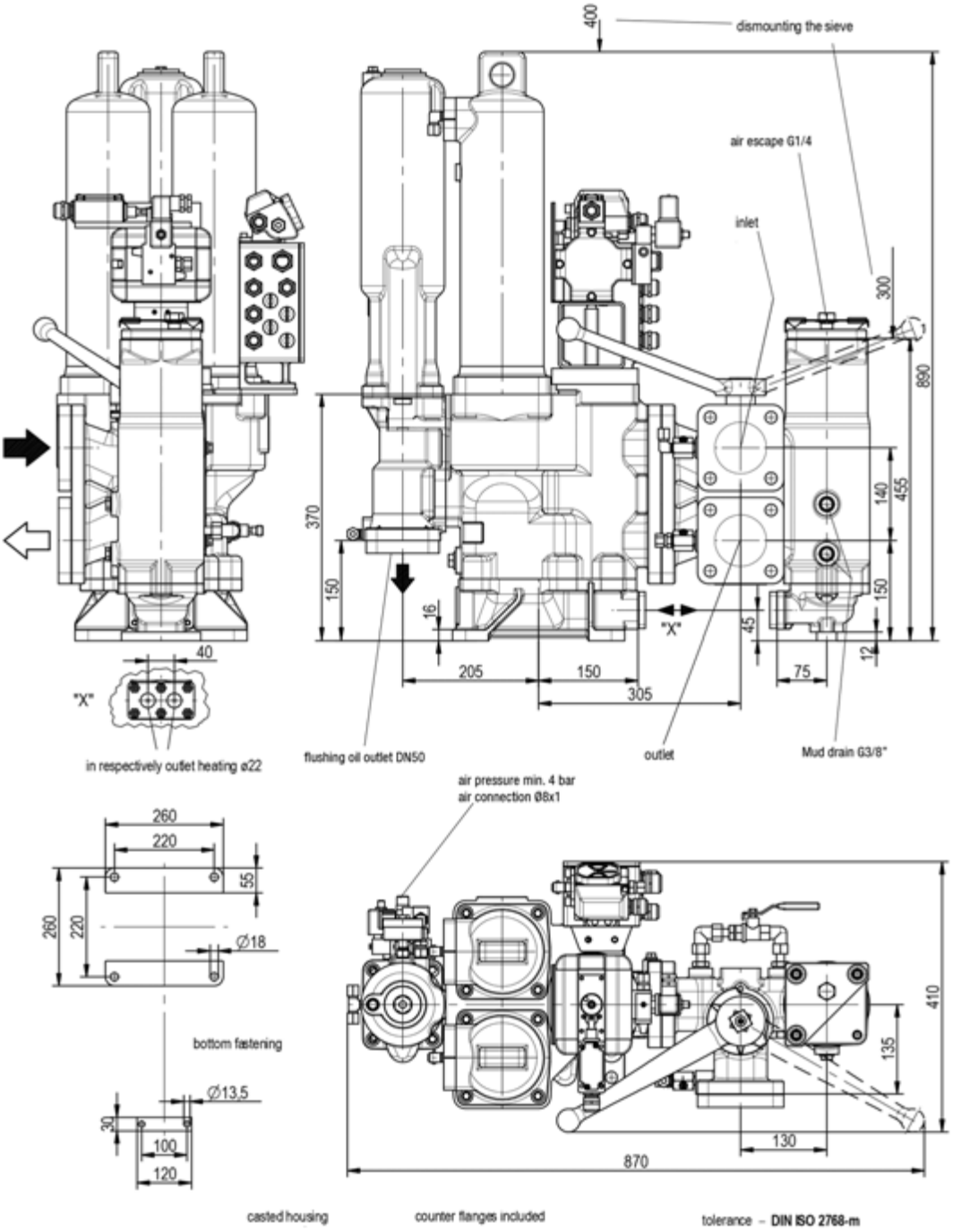

DN80 - Typ 6.72.1

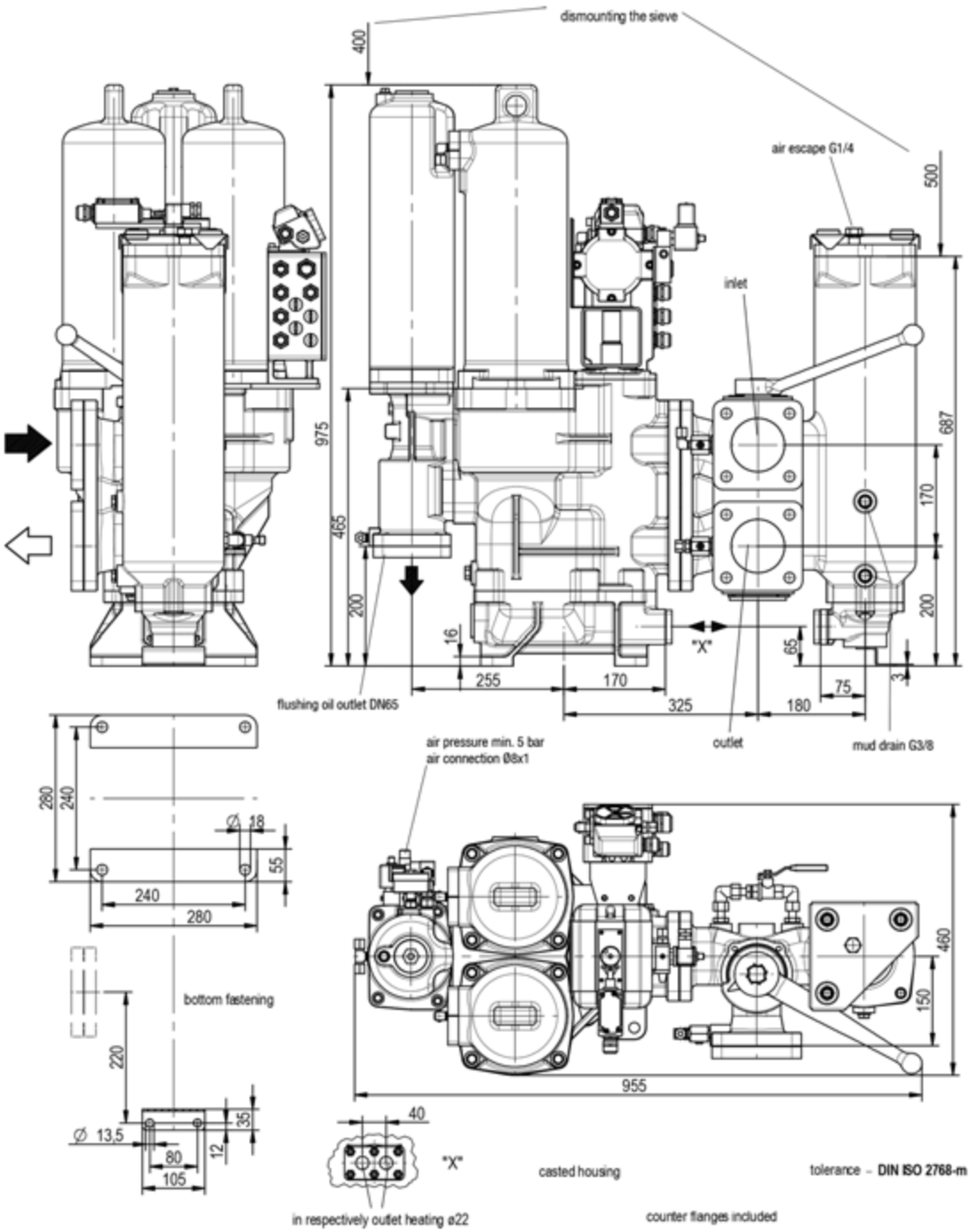

2023-08-30 - en

DN100 - Typ 6.64.1

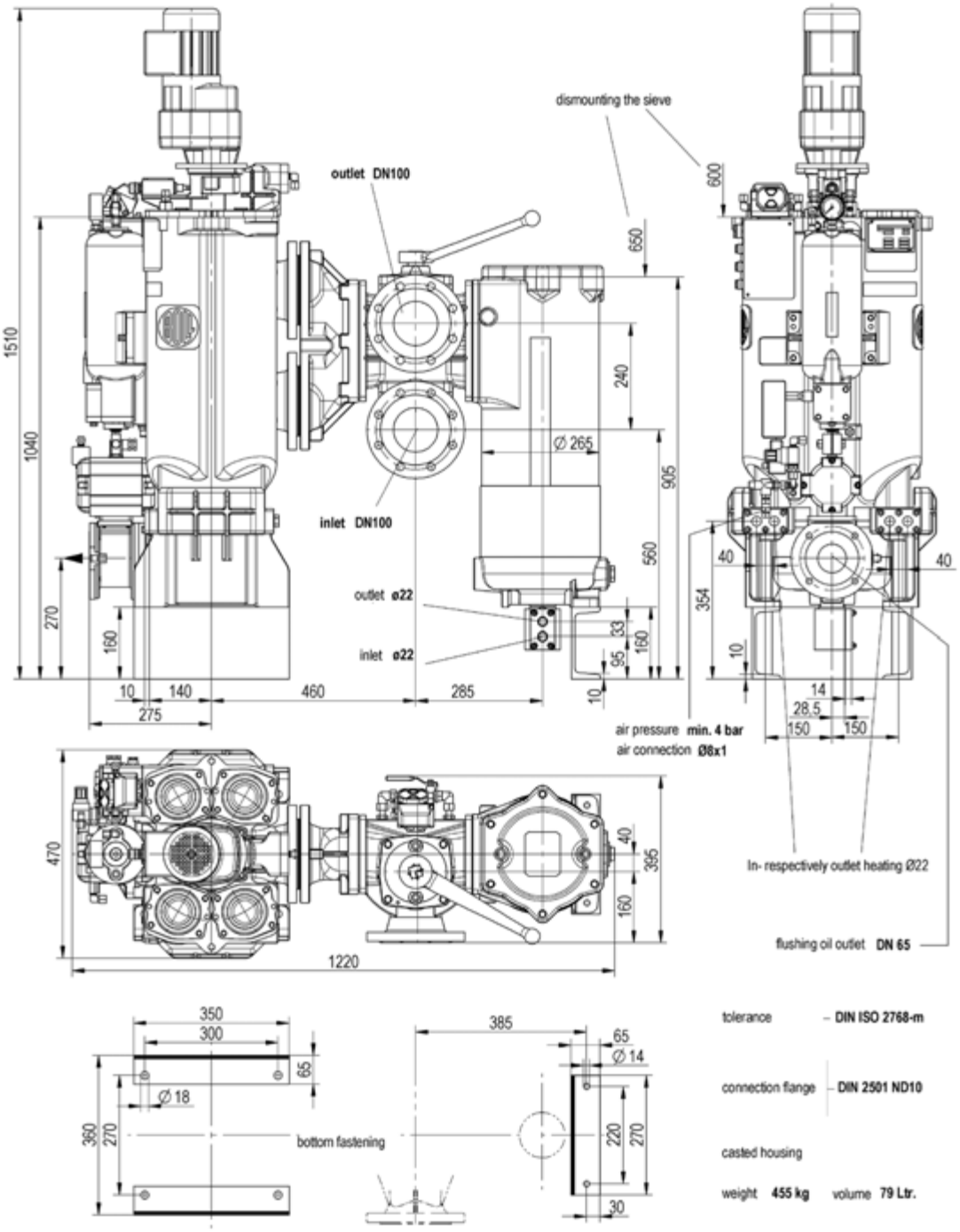

Automatic back-flush filter

Automatic back-flush filter

To protect the GenSets from foreign particles in the fuel (cat fines attack), must a common automatic back-flush filter be installed in the circulation line, just before the branching to the individual GenSets.
The automatic back-flush filter with a change-over cock and by-pass simplex filter and with integrated heating chamber, has a mesh size of 10 microns (absolute/sphere passing mesh).
The automatic back-flush filter permits a continuous operation and is back-flushed continuously, without any interruptions of flow.

The continuous back-flushing significantly prevents adhesion of retained solids to filter surfaces and no manual cleaning of filter elements is needed.
The constant pressure drop across the filter, combined with the pressure drop indicator, facilitates the detection of a malfunction in the fuel oil system.
The use of filtered oil for the back-flushing process eliminates the need for compressed air.
The diversion chamber acts as an automatic maintenance-free sludge treatment system, collecting particles back-flushed from the full-flow chamber and cleaning itself to concentrate sludge. The solids settle to the bottom of the diversion chamber, where they are periodically discharged through the drain cock.

2023-08-30 - en

Filter specification

Range of application	:	Heavy fuel oil 700 cSt @ 50°C
Max. operating pressure	:	16 bar
Test pressure	:	30 bar
Max. operating temperature	:	160°C
Nominal width of connection flanges	:	DN25, DN40, DN50
Grade of filtration	:	10 microns (absolute/sphere passing mesh)
Cleaning	:	Continuous back flushing driven by the filtered oil
Alarm contact switches at differential pressure	:	0.8 bar
Housing material	:	Nodular cast iron
Filter screen material	:	Stainless steel
Heating method	:	Steam/hot water/thermal oil
Power supply	:	110/220 V, 50/60 Hz, single phase
Consumption	:	0.20 A (110 V), 0.10 A (220 V)
Protection Class F	:	IP55, tropicalized

2023-08-30 - en

Specification L16/24

1000 rpm		Booster circuit				
Qty. engines		5L16/24	6L16/24	7L16/24	8L16/24	9L16/24
1	Outlet flow	0.32	0.4	0.47	0.54	0.6
	Inlet flow	0.57	0.65	0.72	0.79	0.85
	Recommended filter size	FM-152-DE 8/4 A01	FM-152-DE 8/4 A01	FM-152-DE 8/4 A01	FM-152-DE 8/4 A01	FM-152-DE 8/4 A01
2	Outlet flow	0.64	0.8	0.94	1.08	1.2
	Inlet flow	0.89	1.05	1.19	1.33	1.45
	Recommended filter size	FM-152-DE 8/4 A01	FM-152-DE 8/4 A01	FM-152-DE 8/4 A01	FM-152-DE 8/4 A01	FM-152-DE 8/4 A01
3	Outlet flow	0.96	1.2	1.41	1.62	1.8
	Inlet flow	1.21	1.45	1.66	1.91	2.12
	Recommended filter size	FM-152-DE 8/4 A01	FM-152-DE 8/4 A01	FM-152-DE 8/4 A01	FM-152-DE 12/6 A01	FM-152-DE 12/6 A01
4	Outlet flow	1.28	1.6	1.88	2.16	2.4
	Inlet flow	1.53	1.88	2.21	2.54	2.82
	Recommended filter size	FM-152-DE 8/4 A01	FM-152-DE 8/4 A01	FM-152-DE 12/6 A01	FM-152-DE 12/6 A01	FM-152-DE 12/6 A01

1200 rpm		Booster circuit				
Qty. engines		5L16/24	6L16/24	7L16/24	8L16/24	9L16/24
1	Outlet flow	0.35	0.47	0.54	0.62	0.7
	Inlet flow	0.60	0.72	0.79	0.87	0.95
	Recommended filter size	FM-152-DE 8/4 A01	FM-152-DE 8/4 A01	FM-152-DE 8/4 A01	FM-152-DE 8/4 A01	FM-152-DE 8/4 A01
2	Outlet flow	0.7	0.94	1.08	1.24	1.4
	Inlet flow	0.95	1.19	1.33	1.49	1.65
	Recommended filter size	FM-152-DE 8/4 A01	FM-152-DE 8/4 A01	FM-152-DE 8/4 A01	FM-152-DE 8/4 A01	FM-152-DE 8/4 A01
3	Outlet flow	1.05	1.41	1.62	1.86	2.1
	Inlet flow	1.30	1.66	1.91	2.19	2.47
	Recommended filter size	FM-152-DE 8/4 A01	FM-152-DE 8/4 A01	FM-152-DE 12/6 A01	FM-152-DE 12/6 A01	FM-152-DE 12/6 A01
4	Outlet flow	1.4	1.88	2.16	2.48	2.8
	Inlet flow	1.65	2.21	2.54	2.92	3.29
	Recommended filter size	FM-152-DE 8/4 A01	FM-152-DE 12/6 A01	FM-152-DE 12/6 A01	FM-152-DE 16/8 A01	FM-152-DE 16/8 A01

2023-08-30 - en

Specification L21/31, L21/31 Mk1.1, L21/31 Mk2, L21/31DF-M

900 rpm		Booster circuit				
Qty. engines		5 cyl. engine	6 cyl. engine	7 cyl. engine	8 cyl. engine	9 cyl. engine
1	Outlet flow	0.89	1.18	1.37	1.57	1.76
	Inlet flow	1.14	1.43	1.62	1.85	2.07
	Recommended filter size	FM-152-DE 8/4 A01	FM-152-DE 8/4 A01	FM-152-DE 8/4 A01	FM-152-DE 8/4 A01	FM-152-DE 12/6 A01
2	Outlet flow	1.78	2.36	2.74	3.14	3.52
	Inlet flow	2.09	2.78	3.22	3.69	4.14
	Recommended filter size	FM-152-DE 12/6 A01	FM-152-DE 12/6 A01	FM-152-DE 16/8 A01	FM-152-DE 16/8 A01	FM-152-DE 24/12 A01
3	Outlet flow	2.67	3.54	4.11	4.71	5.28
	Inlet flow	3.14	4.16	4.84	5.54	6.21
	Recommended filter size	FM-152-DE 16/8 A01	FM-152-DE 24/12 A01	FM-152-DE 24/12 A01	FM-152-DE 24/12 A01	FM-152-DE 30/12 A01
4	Outlet flow	3.56	4.72	5.48	6.28	7.04
	Inlet flow	4.19	5.55	6.45	7.39	8.28
	Recommended filter size	FM-152-DE 24/12 A01	FM-152-DE 24/12 A01	FM-152-DE 30/12 A01	FM-152-DE 60/24 A01	FM-152-DE 60/24 A01

1000 rpm		Booster circuit				
Qty. engines		5 cyl. engine	6 cyl. engine	7 cyl. engine	8 cyl. engine	9 cyl. engine
1	Outlet flow	0.89	1.18	1.37	1.57	1.76
	Inlet flow	1.14	1.43	1.62	1.85	2.07
	Recommended filter size	FM-152-DE 8/4 A01	FM-152-DE 8/4 A01	FM-152-DE 8/4 A01	FM-152-DE 8/4 A01	FM-152-DE 12/6 A01
2	Outlet flow	1.78	2.36	2.74	3.14	3.52
	Inlet flow	2.09	2.78	3.22	3.69	4.14
	Recommended filter size	FM-152-DE 12/6 A01	FM-152-DE 12/6 A01	FM-152-DE 16/8 A01	FM-152-DE 16/8 A01	FM-152-DE 24/12 A01
3	Outlet flow	2.67	3.54	4.11	4.71	5.28
	Inlet flow	3.14	4.16	4.84	5.54	6.21
	Recommended filter size	FM-152-DE 16/8 A01	FM-152-DE 24/12 A01	FM-152-DE 24/12 A01	FM-152-DE 24/12 A01	FM-152-DE 30/12 A01
4	Outlet flow	3.56	4.72	5.48	6.28	7.04
	Inlet flow	4.19	5.55	6.45	7.39	8.28
	Recommended filter size	FM-152-DE 24/12 A01	FM-152-DE 24/12 A01	FM-152-DE 30/12 A01	FM-152-DE 60/24 A01	FM-152-DE 60/24 A01

2023-08-30 - en

Specification L23/30H, L23/30H Mk2, L23/30H Mk3

720/750 rpm		Booster circuit			
Qty. engines		5 cyl. engine	6 cyl. engine	7 cyl. engine	8 cyl. engine
1	Outlet flow	0.53	0.63	0.74	0.84
	Inlet flow	0.78	0.88	0.99	1.09
	Recommended filter size	FM-152-DE 8/4 A01	FM-152-DE 8/4 A01	FM-152-DE 8/4 A01	FM-152-DE 8/4 A01
2	Outlet flow	1.06	1.26	1.48	1.68
	Inlet flow	1.31	1.51	1.74	1.98
	Recommended filter size	FM-152-DE 8/4 A01	FM-152-DE 8/4 A01	FM-152-DE 8/4 A01	FM-152-DE 12/6 A01
3	Outlet flow	1.59	1.89	2.22	2.52
	Inlet flow	1.87	2.22	2.61	2.96
	Recommended filter size	FM-152-DE 8/4 A01	FM-152-DE 12/6 A01	FM-152-DE 12/6 A01	FM-152-DE 16/8 A01
4	Outlet flow	2.12	2.52	2.96	3.36
	Inlet flow	2.49	2.96	3.48	3.95
	Recommended filter size	FM-152-DE 12/6 A01	FM-152-DE 16/8 A01	FM-152-DE 16/8 A01	FM-152-DE 24/12 A01

900 rpm		Booster circuit		
Qty. engines		6 cyl. engine	7 cyl. engine	8 cyl. engine
1	Outlet flow	0.75	0.88	1.01
	Inlet flow	1.00	1.13	1.26
	Recommended filter size	FM-152-DE 8/4 A01	FM-152-DE 8/4 A01	FM-152-DE 8/4 A01
2	Outlet flow	1.5	1.76	2.02
	Inlet flow	1.76	2.07	2.38
	Recommended filter size	FM-152-DE 8/4 A01	FM-152-DE 12/6 A01	FM-152-DE 12/6 A01
3	Outlet flow	2.25	2.64	3.03
	Inlet flow	2.65	3.11	3.56
	Recommended filter size	'FM-152-DE 12/6 A01	FM-152-DE 16/8 A01	FM-152-DE 16/8 A01
4	Outlet flow	3	3.52	4.04
	Inlet flow	3.53	4.14	4.75
	Recommended filter size	FM-152-DE 16/8 A01	FM-152-DE 24/12 A01	FM-152-DE 24/12 A01

2023-08-30 - en

Specification L27/38

720 rpm		Booster circuit				
Qty. engines		5L27/38	6L27/38	7L27/38	8L27/38	9L27/38
1	Outlet flow	1.06	1.4	1.63	1.87	2.1
	Inlet flow	1.31	1.65	1.92	2.20	2.47
	Recommended filter size	FM-152-DE 8/4 A01	FM-152-DE 8/4 A01	FM-152-DE 12/6 A01	FM-152-DE 12/6 A01	FM-152-DE 12/6 A01
2	Outlet flow	2.12	2.8	3.26	3.74	4.2
	Inlet flow	2.49	3.29	3.84	4.40	4.94
	Recommended filter size	FM-152-DE 12/6 A01	FM-152-DE 16/8 A01	FM-152-DE 24/12 A01	FM-152-DE 24/12 A01	FM-152-DE 24/12 A01
3	Outlet flow	3.18	4.2	4.89	5.61	6.3
	Inlet flow	3.74	4.94	5.75	6.60	7.41
	Recommended filter size	FM-152-DE 16/8 A01	FM-152-DE 24/12 A01	FM-152-DE 30/12 A01	FM-152-DE 30/12 A01	FM-152-DE 60/24 A01
4	Outlet flow	4.24	5.6	6.52	7.48	8.4
	Inlet flow	4.99	6.59	7.67	8.80	9.88
	Recommended filter size	FM-152-DE 24/12 A01	FM-152-DE 30/12 A01	FM-152-DE 60/24 A01	FM-152-DE 60/24 A01	FM-152-DE 60/24 A01

750 rpm		Booster circuit				
Qty. engines		5L27/38	6L27/38	7L27/38	8L27/38	9L27/38
1	Outlet flow	1.13	1.4	1.63	1.87	2.1
	Inlet flow	1.38	1.65	1.92	2.20	2.47
	Recommended filter size	FM-152-DE 8/4 A01	FM-152-DE 8/4 A01	FM-152-DE 12/6 A01	FM-152-DE 12/6 A01	FM-152-DE 12/6 A01
2	Outlet flow	2.26	2.8	3.26	3.74	4.2
	Inlet flow	2.66	3.29	3.84	4.40	4.94
	Recommended filter size	FM-152-DE 12/6 A01	FM-152-DE 16/8 A01	FM-152-DE 24/12 A01	FM-152-DE 24/12 A01	FM-152-DE 24/12 A01
3	Outlet flow	3.39	4.2	4.89	5.61	6.3
	Inlet flow	3.99	4.94	5.75	6.60	7.41
	Recommended filter size	FM-152-DE 24/12 A01	FM-152-DE 24/12 A01	FM-152-DE 30/12 A01	FM-152-DE 30/12 A01	FM-152-DE 60/24 A01
4	Outlet flow	4.52	5.6	6.52	7.48	8.4
	Inlet flow	5.32	6.59	7.67	8.80	9.88
	Recommended filter size	FM-152-DE 24/12 A01	FM-152-DE 30/12 A01	FM-152-DE 60/24 A01	FM-152-DE 60/24 A01	FM-152-DE 60/24 A01

2023-08-30 - en

Specification L28/32H

720 rpm		Booster circuit				
Qty. engines		5L28/32H	6L28/32H	7L28/32H	8L28/32H	9L28/32H
1	Outlet flow	0.74	0.89	1.04	1.19	1.34
	Inlet flow	0.99	1.14	1.29	1.44	1.59
	Recommended filter size	FM-152-DE 8/4 A01	FM-152-DE 8/4 A01	FM-152-DE 8/4 A01	FM-152-DE 8/4 A01	FM-152-DE 8/4 A01
2	Outlet flow	1.48	1.78	2.08	2.38	2.68
	Inlet flow	1.74	2.09	2.45	2.80	3.15
	Recommended filter size	FM-152-DE 8/4 A01	FM-152-DE 12/6 A01	FM-152-DE 12/6 A01	FM-152-DE 12/6 A01	FM-152-DE 16/8 A01
3	Outlet flow	2.22	2.67	3.12	3.57	4.02
	Inlet flow	2.61	3.14	3.67	4.20	4.73
	Recommended filter size	FM-152-DE 12/6 A01	FM-152-DE 16/8 A01	FM-152-DE 16/8 A01	FM-152-DE 24/12 A01	FM-152-DE 24/12 A01
4	Outlet flow	2.96	3.56	4.16	4.76	5.36
	Inlet flow	3.48	4.19	4.89	5.60	6.31
	Recommended filter size	FM-152-DE 16/8 A01	FM-152-DE 24/12 A01	FM-152-DE 24/12 A01	FM-152-DE 24/12 A01	FM-152-DE 30/12 A01

750 rpm		Booster circuit				
Qty. engines		5L28/32H	6L28/32H	7L28/32H	8L28/32H	9L28/32H
1	Outlet flow	0.78	0.93	1.09	1.24	1.4
	Inlet flow	1.03	1.18	1.34	1.49	1.65
	Recommended filter size	FM-152-DE 8/4 A01	FM-152-DE 8/4 A01	FM-152-DE 8/4 A01	FM-152-DE 8/4 A01	FM-152-DE 8/4 A01
2	Outlet flow	1.56	1.86	2.18	2.48	2.8
	Inlet flow	1.84	2.19	2.56	2.92	3.29
	Recommended filter size	FM-152-DE 8/4 A01	FM-152-DE 12/6 A01	FM-152-DE 12/6 A01	FM-152-DE 16/8 A01	FM-152-DE 16/8 A01
3	Outlet flow	2.34	2.79	3.27	3.72	4.2
	Inlet flow	2.75	3.28	3.85	4.38	4.94
	Recommended filter size	FM-152-DE 12/6 A01	FM-152-DE 16/8 A01	FM-152-DE 24/12 A01	FM-152-DE 24/12 A01	FM-152-DE 24/12 A01
4	Outlet flow	3.12	3.72	4.36	4.96	5.6
	Inlet flow	3.67	4.38	5.13	5.84	6.59
	Recommended filter size	FM-152-DE 16/8 A01	FM-152-DE 24/12 A01	FM-152-DE 24/12 A01	FM-152-DE 30/12 A01	FM-152-DE 30/12 A01

2023-08-30 - en

3700397-1.2

Automatic back-flush filter

Description

FM-152-DE 8/4

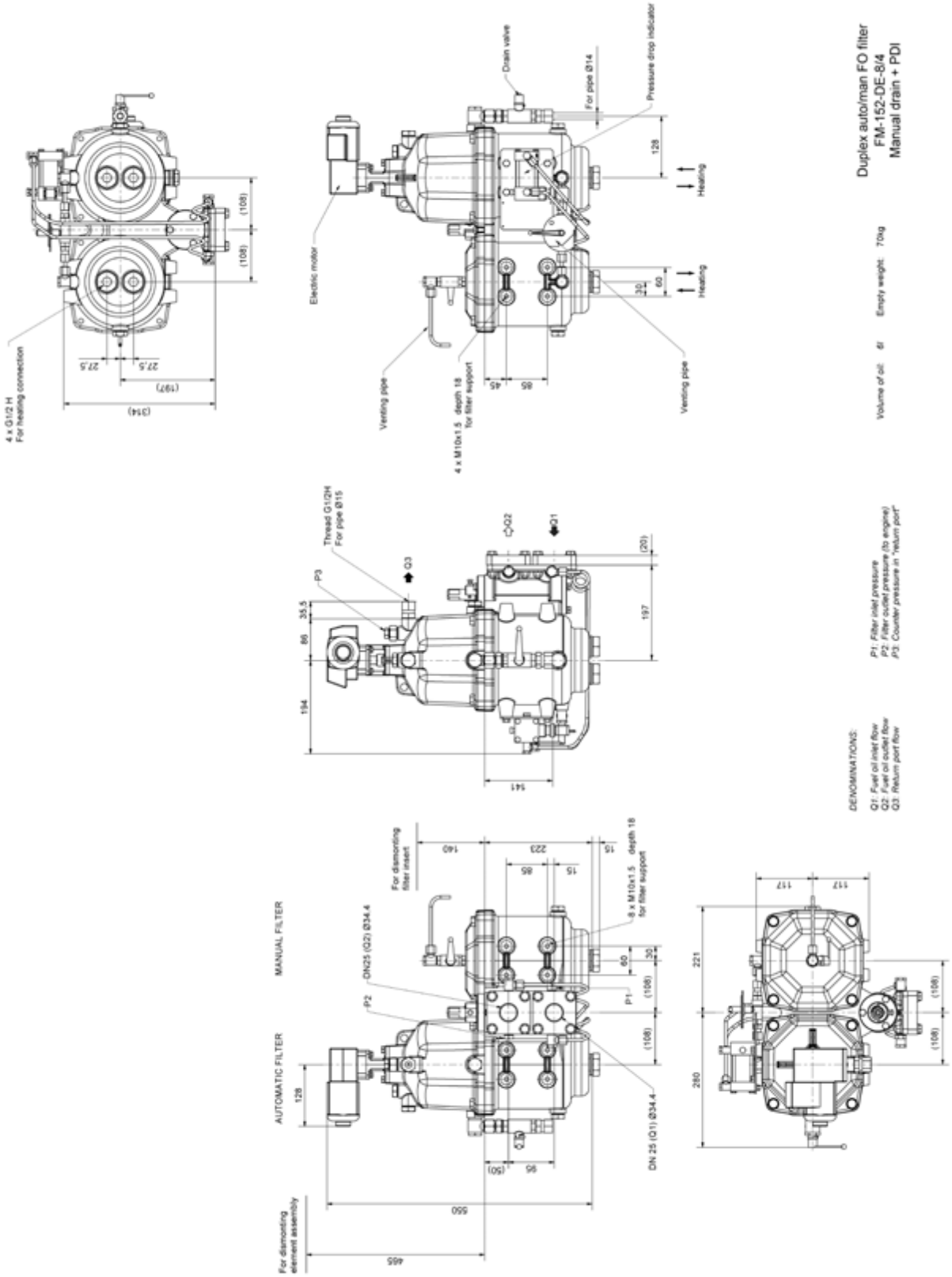

2023-08-30 - en

FM-152-DE 12/6 & 16/8

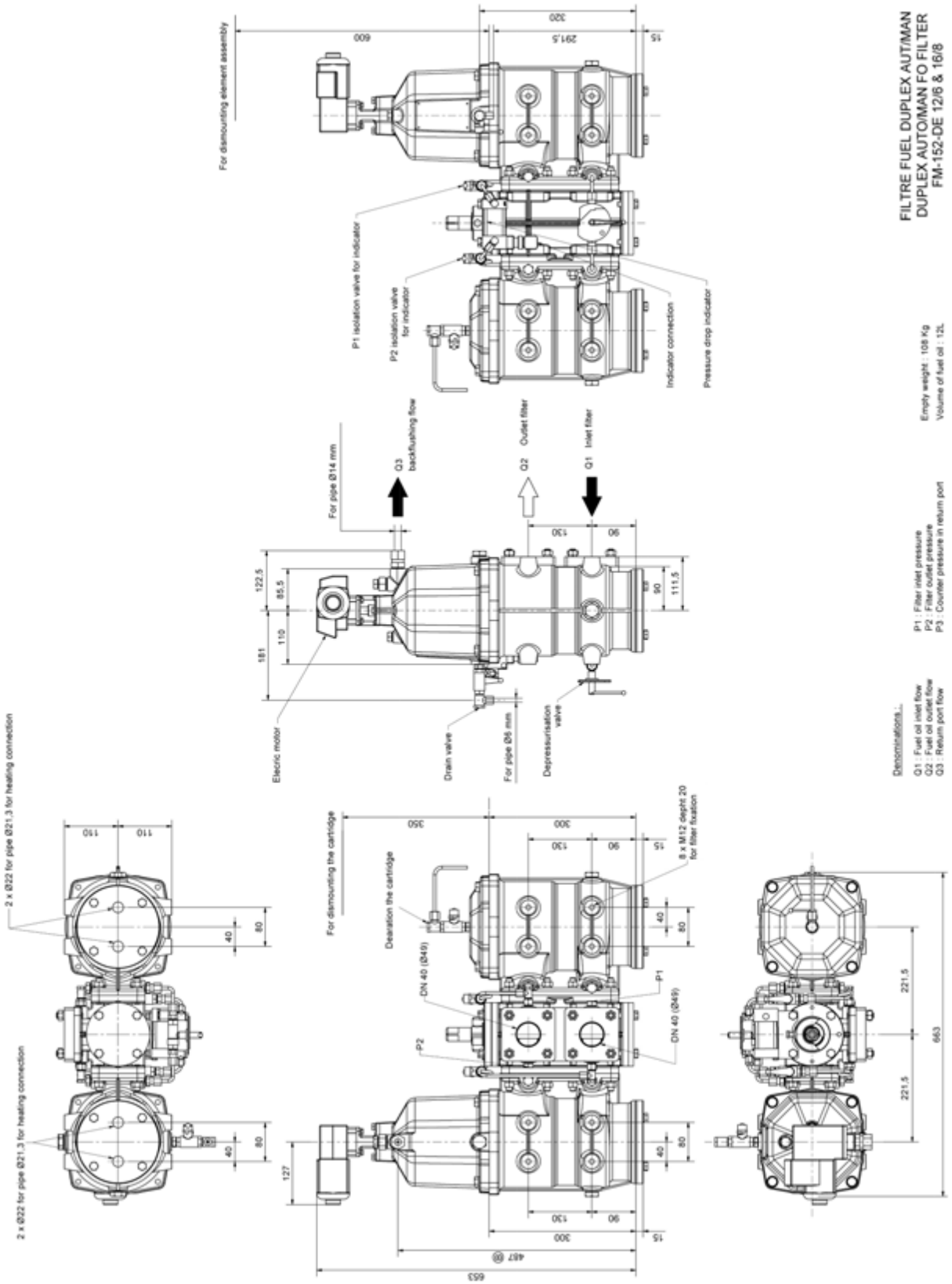

3700397-1.2

Automatic back-flush filter

Description

2023-08-30 - en

3700397-1.2

Automatic back-flush filter

Description

FM-152-DE 24/12

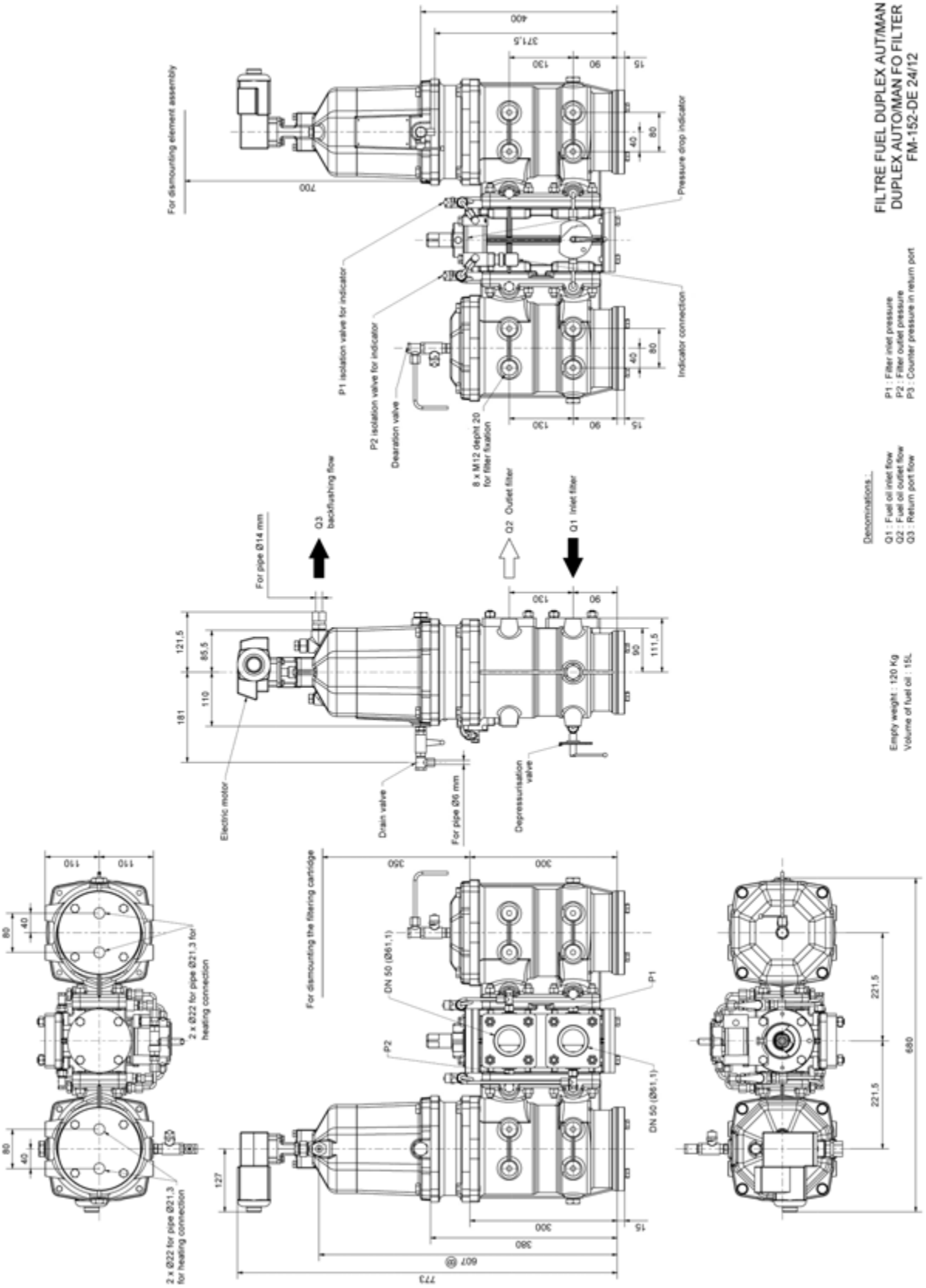

2023-08-30 - en

FM-152-DE 30/12

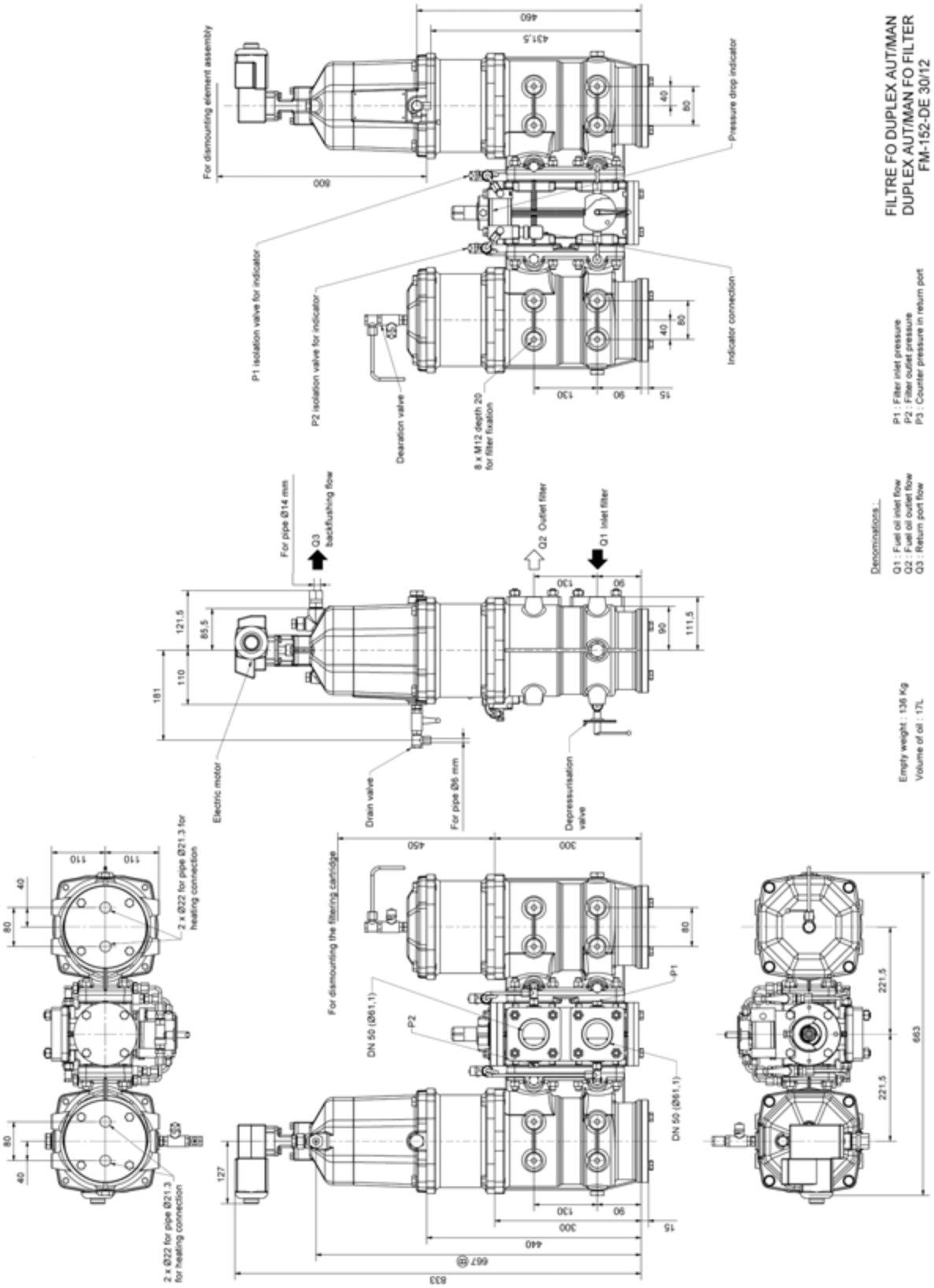

3700397-1.2

Automatic back-flush filter

Description

2023-08-30 - en

3700397-1.2

Automatic back-flush filter

Description

FM-152-DE 60/24

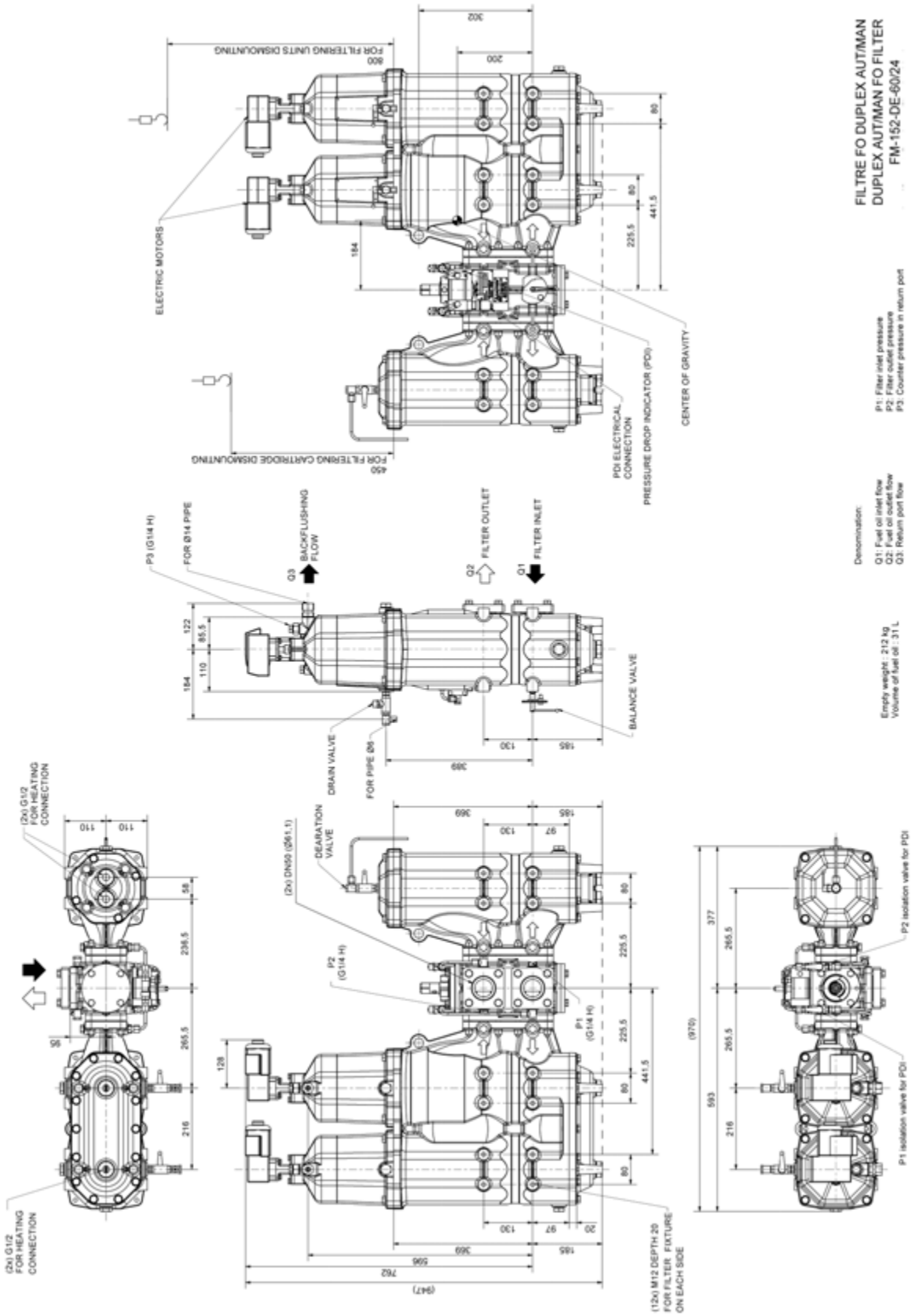

2023-08-30 - en

Internal lubricating oil system

Internal lubricating oil system

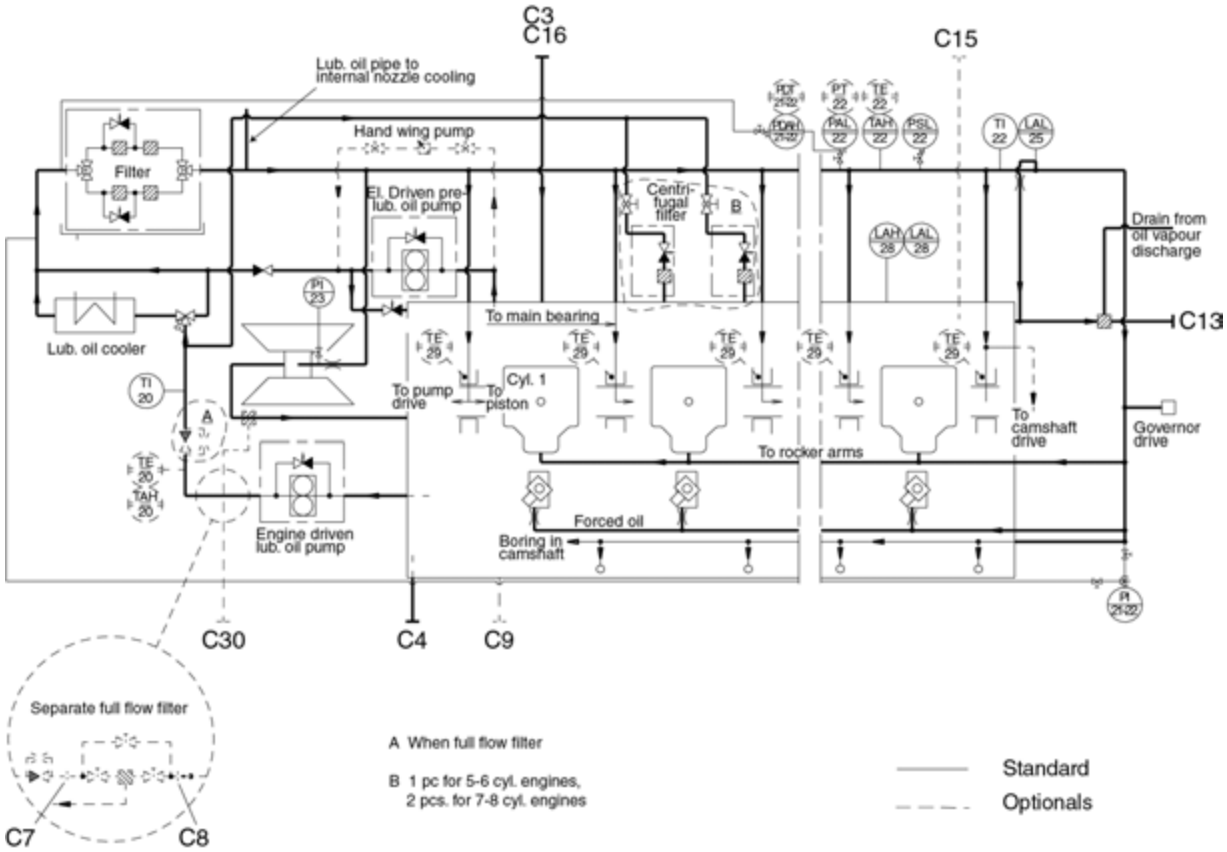

Figure 1: Diagram for lubricating oil system (for guidance only, please see the plant specific engine diagram)

Pipe description for connection at the engine		
C3	Lubricating oil from separator	DN25
C4	Lubricating oil to separator	DN25
C7	Lubricating oil from separate filter	DN65
C8	Lubricating oil to separate filter	DN65
C9	Back-flush from full-flow filter	DN20
C13	Oil vapour discharge*	DN50
C15	Lubricating oil overflow	DN50
C16	Lubricating oil supply	DN25

Table 1: *Flange connections are as standard according to DIN 2501*

* For external pipe connection, *please see Crankcase ventilation, B 12 00 0/515.31*.

2016-01-19 - en

General

As standard the lubricating oil system is based on wet sump lubrication. All moving parts of the engine are lubricated with oil circulating under pressure in a closed built-on system.

The lubricating oil is furthermore used for the purpose of cooling the pistons.

The standard engine is equipped with built-on:

- Engine driven lubricating oil pump
- Lubricating oil cooler
- Lubricating oil thermostatic valve
- Duplex full-flow depth filter
- Pre-lubricating oil pump
- Centrifugal by-pass filter

Oil quantities

The approximate quantities of oil necessary for a new engine, before starting up are given in the table, see "*B 12 01 1 / 504.06 / 604.06 Lubricating Oil in Base Frame*" (max. litre H3)

If there are connected external, full-flow filters etc., the quantity of oil in the external piping must also be taken into account.

Max. velocity recommendations for external lubricating oil pipes:

- Pump suction side	1.0 - 1.5 m/s
- Pump discharge side	1.5 - 2.0 m/s

Lubricating oil consumption

The lubricating oil consumption, see "*Specific lubricating oil consumption - SLOC, B 12 15 0 / 504.07*"

It should, however, be observed that during the running in period the lubricating oil consumption may exceed the values stated.

Quality of oil

Only HD lubricating oil (Detergent Lubricating Oil) should be used, characteristic stated in "*Lubricating Oil Specification, 010.000.023*".

System flow

The lubricating oil pump draws oil from the oil sump and presses the oil through the cooler and filter to the main lubricating oil pipe, from where the oil is distributed to the individual lubricating points. From the lubricating points the oil returns by gravity to the oil sump.

The main groups of components to be lubricated are:

1. Turbocharger
2. Main bearings, big-end bearing etc.
3. Camshaft drive

2016-01-19 - en

4. Governor drive
5. Rocker arms
6. Camshaft

7. For priming and during operation, the turbocharger is connected to the lubricating oil circuit of the engine, the oil serves for bearing lubrication and also for dissipation of heat.

   The inlet line to the turbocharger is equipped with an orifice in order to adjust the oil flow and a non-return valve to prevent draining during standstill.

   The non-return valve has back-pressure function requiring a pressure slightly above the priming pressure to open in normal flow direction. In this way overflooding of the turbocharger is prevented during stand-still periods, where the pre-lubricating pump is running.
8. Lubricating oil for the main bearings is supplied through holes drilled in the engine frame. From the main bearings it passes through bores in the crankshaft to the connecting rod big-end bearings.

   The connecting rods have bored channels for supply of oil from the big-end bearings to the small-end bearings, which has an inner circumferential groove, and a pocket for distribution of oil in the bush itself and for supply of oil to the pin bosses and the piston cooling through holes and channels in the piston pin.

   From the front main bearings channels are bored in the crankshaft for lubricating of the pump drive.
9. The lubricating oil pipes, for the camshaft drive gear wheels, are equipped with nozzles which are adjusted to apply the oil at the points where the gear wheels are in mesh.
10. The lubricating oil pipe, and the gear wheels for the governor drive are adjusted to apply the oil at the points where the gear wheels are in mesh.
11. The lubricating oil to the rocker arms is led through pipes to each cylinder head. It continuous through bores in the cylinder head and rocker arm to the movable parts to be lubricated at rocker arms and valve bridge. Further, lubricating oil is led to the movable parts in need of lubrication.
12. Through a bore in the frame lubricating oil is led to the first camshaft bearing and through bores in the camshaft from where it is distributed to the other camshaft bearings.

Lubricating oil pump

The lubricating oil pump, which is of the gear wheel type, is mounted on the front end of the engine and is driven by means of the crankshaft through a coupling. The oil pressure is controlled by an adjustable spring- loaded relief valve built-on the oil pump.

Thermostatic valve

The thermostatic valve is designed as a T-piece with the inlet in the cover (A) under which the thermostatic elements are located.

2016-01-19 - en

The outlet to the engine (by-passing cooler) is marked (B) and outlet to the cooler is marked (C). In the warming up period, the oil is by-passing the cooler. When the oil from the engine reaches the normal temperature see "Operation data & set points 500.30 / 600.30" a controlled amount of oil passes through the cooler.

The thermostatic elements must be replaced if the temperature during normal operation deviates essential from the one stated in the test report.

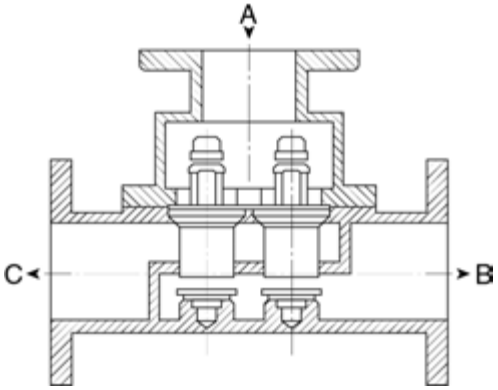

Figure 2: Thermostatic valve

The valve cannot be set or adjusted, and it requires no maintenance.

Built-on full-flow depth filter

The lubricating oil filter is a double filter which is generally used with only one filter chamber being in operation, the other filter chamber being stand-by.

If the filter chamber in operation needs to be serviced, the operation can be switched to the other filter chamber without any interruption in lubricating oil supply to the engine.

Servicing is generally restricted to replacing of the paper cartridges, cleaning of the radial mesh insert and inspection of sealings, the latter to be replaced if damages observed.

Each filter chamber is equipped with 1 or 2 replaceable paper cartridges of fineness 10-15 microns.

In the centre of each filter chamber a filter basket (central element) is situated. This filter basket is acting as a safety filter, having a fineness of about 60 microns.

During operation an increased pressure drop across the filter will be observed as dirt particles will deposit on the filtration surfaces of the paper cartridges and thus increase the flow resistance through the filter.

If the pressure drop across the filter exceeds 2.0 bar, a release valve will open and by-pass the 10-15 microns filter element, and the engine will run with only the 60 microns safety filter.

To ensure safe filtering of the lubricating oil, none of the by-pass valves must open during normal service and the elements should be replaced at a pressure drop across the filter of 1.5 bar.

Servicing is essential the exchange of the paper cartridges.

When exchanging cartridges, it is advisable to release any old oil remaining in the filter housing by means of the drain plug provided for this purpose, and to wipe out the housing with a cloth.

2016-01-19 - en

The filter chambers can be serviced successively during operation or when the engine is at standstill.

It is essential to follow the instructions in work card 515-01.10 / 615-01.10 closely when replacing filter cartridges.

Filter cartridges must under no circumstances be cleaned and used again.

Pre-lubricating

As standard the engine is equipped with an electric-driven prelubricating pump mounted parallel to the main pump. The pump must be arranged for automatic operation, ensuring stand-still of the pre-lubricating pump when the engine is running, and running during engine stand-still in stand-by position.

Running period of the pre-lubricating pump is preferably to be continuous. If intermittent running is required for energy saving purpose, the timing equipment should be set for shortest possible intervals, say 2 minutes of running, 10 minures of stand-still, etc. Further, it is recommended that the pre-lubricating pump is connected to the emergency switch board thus securing that the engine is not started without pre-lubrication.

Draining of the oil sump

It is recommended to use the separator suction pipe for draining of the lubricating oil sump.

Optionals

Besides the standard components, the following optionals can be built-on:

- Level switch for low/high level in oil sump (LAL/LAH 28)
- Centrifugal by-pass filter (standard for stationary engines)
- Hand wing pump

Pressure differential transmitting

- PDT 21-22 Lubricating oil inlet across filter

Temperature alarm high

- TAH 20 Lubricating oil inlet before cooler

Pressure transmitting

- PT 22 Lubricating oil inlet after cooler

Temperature element

- TE 20 Lubricating oil inlet before cooler

Temperature element

- TE 22 Lubricating oil inlet after cooler

Temperature element

- TE 29 Lubricating oil inlet main bearings

Branches for:

- External fine filter
- External full/flow filter

Branches for separator is standard.

2016-01-19 - en

Data

For heat dissipation and pump capacities, see *D 10 05 0 "List of capacities"*.

Operation levels for temperature and pressure are stated in *B 19 00 0 "Operating Data and Set Points"*.

2016-01-19 - en

Crankcase ventilation

Crankcase ventilation

The crankcase ventilation is not to be directly connected with any other piping system. It is preferable that the crankcase ventilation pipe from each engine is led independently to the open air. The outlet is to be fitted with corrosion resistant flame screen separately for each engine.

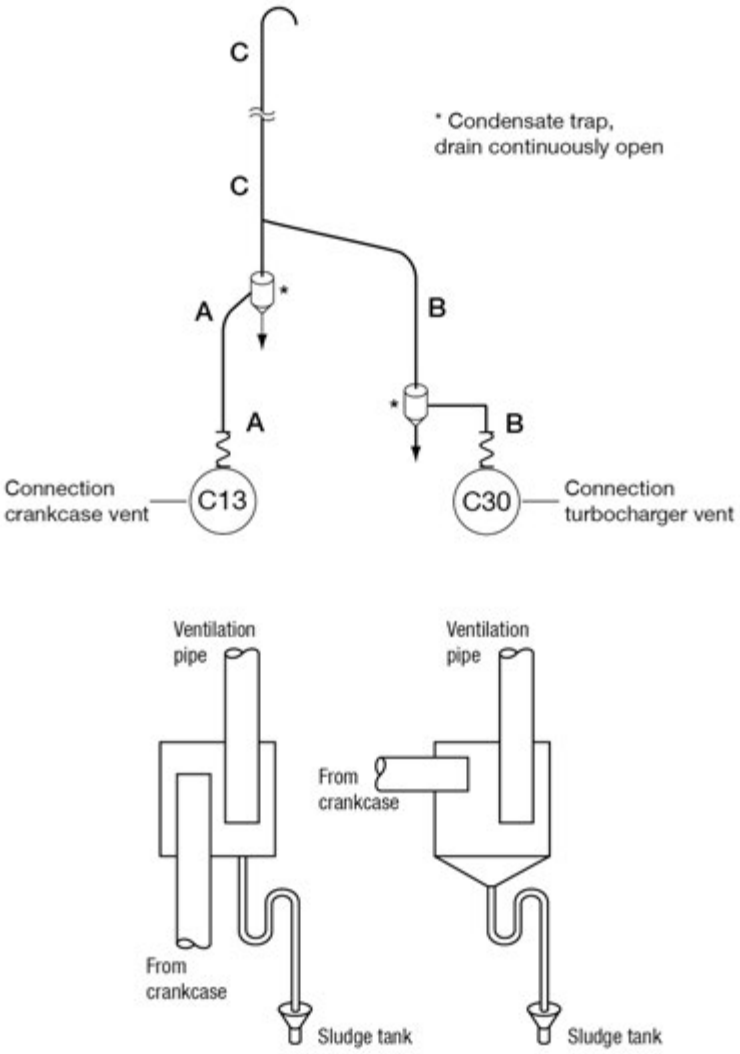

Figure 1: Crankcase ventilation

However, if a manifold arrangement is used, its arrangements are to be as follows:

1) The vent pipe from each engine is to run independently to the manifold and be fitted with corrosion resistant flame screen within the manifold.

2025-03-19 - en

2) The manifold is to be located as high as practicable so as to allow a substantial length of piping, which separates the crankcase on the individual engines.
3) The manifold is to be vented to the open air, so that the vent outlet is fitted with corrosion resistant flame screen, and the clear open area of the vent outlet is not less than the aggregate area of the individual crankcase vent pipes entering the manifold.
4) The manifold is to be provided with drainage arrangement.

The ventilation pipe must be designed to eliminate the risk of water condensation in the pipe flowing back into the engine and should end in the open air:

- The connection between engine (C13 / C30) and the ventilation pipe must be flexible.
- The ventilation pipe must be made with continuous upward slope of minimum 5°, even when the ship heel or trim (static inclination).
- A continuous drain must be installed near the engine. The drain must be led back to the sludge tank.

Engine	Nominal diameter ND (mm)		
	A	B	C
L16/24, L16/24S	50		65
L21/31, L21/31S, L21/31 Mk 1.1 L21/31 Mk 2, L21/31DF-M	65	40	80
L23/30H**, L23/30S**	50	-	65
L23/30DF, L23/30H***, L23/30H Mk 2, L23/30H Mk 3	50	25	65
L27/38, L27/38S, L27/38 Mk2	100	-	100
L28/32DF	50	40	65
L28/32H**, L28/32S**	50	-	65
L28/32H***, L28/32S***	50	40	65
V28/32H	100	-	125
V28/32DF	100	-	125
V28/32S	100	-	125
Turbo application : ** NR, *** TCR			

Table 1: Pipe diameters for crankcase ventilation

- Dimension of the flexible connection, *see pipe diameters in table 1*.
- Dimension of the ventilation pipe after the flexible connection, *see pipe diameters in table 1*.

The crankcase ventilation flow rate varies over time, from the engine is new/major overhauled, until it is time to overhaul the engine again.

The crankcase ventilation flow rate is in the range of 3.5 – 5.0 ‰ of the combustion air flow rate [m³/h] at 100 % engine load.

2025-03-19 - en

If the combustion air flow rate at 100 % engine load is stated in [kg/h] this can be converted to [m³/h] with the following formula (Tropic Reference Condition) :

$$\frac{287.04\ [Nm/(kg \bullet K)] \bullet \text{Mass flow}\ [kg/h] \bullet 318.16\ [°K]}{1\ [bar] \bullet 100000\ [N/m^2]}$$

Example :

Engine with a mechanical output of 880 kW and combustion air consumption of 6000 [kg/h] corresponds to :

$$\frac{287.04\ [Nm/(kg \bullet K)] \bullet 6000\ [kg/h] \bullet 318.16\ [°K]}{1\ [bar] \bullet 100000\ [N/m^2]}$$

$$= 5479\ [m^3/h]$$

The crankcase ventilation flow rate will then be in the range of 19.2 – 27.4 [m³/h]

The maximum crankcase pressure measured at 100% engine load must not exceed 3.0 (mbar) = 30 (mmWc). Normal values 8–18 mmWC. *See work card M5031101*.

2025-03-19 - en

This page is intentionally left blank

2025-03-19 - en

Lubricating oil in base frame

Lubricating oil in base frame

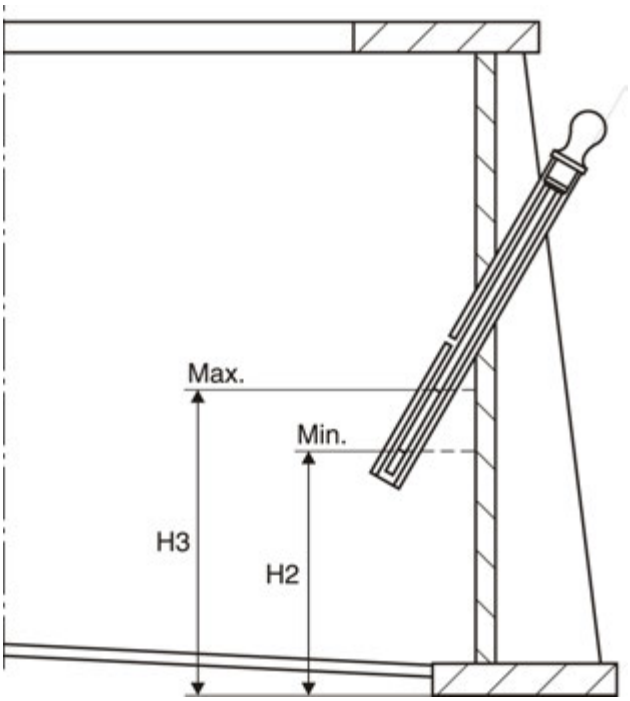

Type L23/30H	5 cyl.	6 cyl.	7 cyl.	8 cyl.
Min. level alarm H2 (mm)	200	200	200	200
Max. level alarm H3 (mm)	250	250	250	250
Min. litre H2	291	344	397	450
Max. litre H3	373	441	509	577

2015-12-08 - en

This page is intentionally left blank

2015-12-08 - en

Lubricating oil in base frame

Lubricating oil in base frame

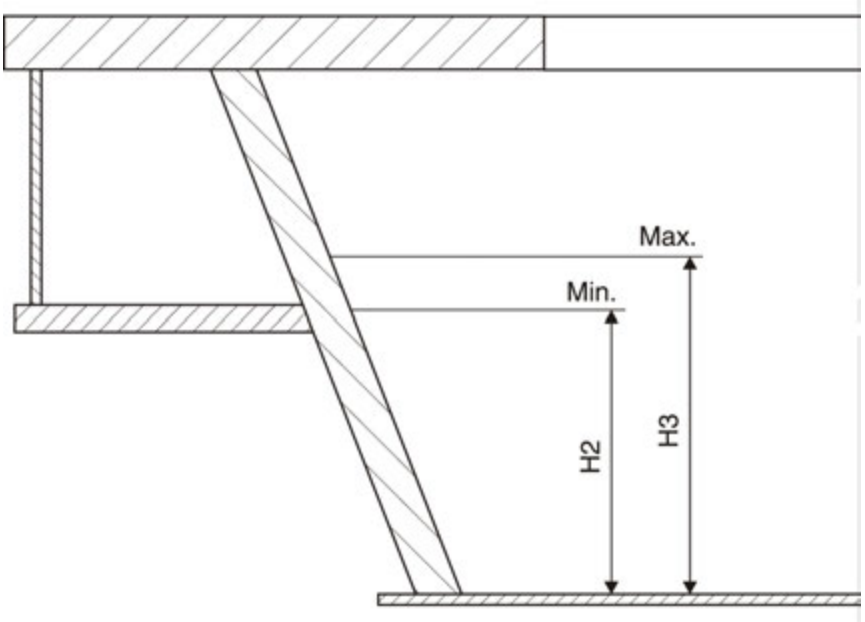

Type L23/30H	6 cyl.	7 cyl.	8 cyl.
Min. level H2 (mm)	275	275	275
Max. level H3 (mm)	325	325	325
Min. litre H2	540	685	706
Max. litre H3	657	814	859

2015-12-08 - en

This page is intentionally left blank

2015-12-08 - en

Prelubricating pump

General

The engine is as standard equipped with an electrically driven pump for pre-lubricating before starting.

The pump which is of the tooth wheel type is self-priming.

The engine shall always be pre-lubricated 2 minutes prior to start if intermittent or continuous pre-lubrication is not installed. Intermittent prelub. is 2 minutes every 10 minutes.

Engine type	T.C.	No. of cyl.	Pump type	m^3/h	Electric motor 230/400 V, 50 Hz (IP 55)	
					kW	Nominal current Amp.
L23/30H L28/32H L28/32S L28/32DF	NR NR+TCR NR+TCR TCR	5-6-7-8 5-6-7-8-9 5-6-7-8-9 5-6-7-8-9	R25/12.5 FL-Z-DB-SO	2.0	0.75	2.9
L23/30H monocoque L23/30H Mk2 L23/30H Mk2 monocoque L23/30S L23/30DF	NR TCR TCR TCR TCR	5-6-7-8 5-6-7-8 5-6-7-8 5-6-7-8 5-6-7-8	R35/25 FL-Z-DB-SO	4.2	1.5	5.5
L23/30H Mk3 monocoque V28/32S	TCR NR	5-6-7-8-9 12-16-18	R35/40 FL-Z-DB-SO	6.8	3.0	9.9

Engine type	T.C.	No. of cyl.	Pump type	m^3/h	Electric motor 265/460 V, 60 Hz (IP 55)	
					kW	Nominal current Amp.
L23/30H L28/32H L28/32S L28/32DF	NR NR+TCR NR+TCR TCR	5-6-7-8 5-6-7-8-9 5-6-7-8-9 5-6-7-8-9	R25/12.5 FL-Z-DB-SO	2.6	0.86	2.96
L23/30H monocoque L23/30H Mk2 L23/30H Mk2 monocoque L23/30S L23/30DF	NR TCR TCR TCR TCR	5-6-7-8 5-6-7-8 5-6-7-8 5-6-7-8 5-6-7-8	R35/25 FL-Z-DB-SO	5.2	1.73	3.0
L23/30H Mk3 monocoque V28/32S	TCR NR	5-6-7-8-9 12-16-18	R35/40 FL-Z-DB-SO	8.7	3.45	5.6

2023-01-13 - en

This page is intentionally left blank

Lubricating oil (SAE 40) specification for residual fuel operation (HFO)

General

The specific output achieved by modern diesel engines combined with the use of fuels that satisfy the quality requirements more and more frequently increase the demands on the performance of the lubricating oil which must therefore be carefully selected.

Medium alkalinity lubricating oils have a proven track record as lubricants for the moving parts and turbocharger cylinder and for cooling the pistons. Lubricating oils of medium alkalinity contain additives that, in addition to other properties, ensure a higher neutralization reserve than with fully compounded engine oils (HD oils).

International specifications do not exist for medium alkalinity lubricating oils. A test operation is therefore necessary for a corresponding long period in accordance with the manufacturer's instructions.

Only lubricating oils that have been approved by Everllence may be used.

The list of the currently approved lubricating oils is available at Lubrication.

Specifications

Additional requirements

Fresh oil must not contain water or other contaminants.

Lubricating oil selection

Engine	SAE class
16/24, 21/31, 27/38, 23/30, 28/32, 32/40, 32/44CR, 35/44DF, 48/60CR, 49/60, 49/60DF, 51/60DF, 51/60R, 51/60R-DF-M	40

Table 1: Viscosity (SAE class) of lubricating oils

Neutralisation properties (BN)

At the present level of knowledge, an interrelation between the expected operating conditions and the BN number can be established. However, the operating results are still the overriding factor in determining which BN number provides the most efficient engine operation.

Table Base number to be used for various operating conditions indicates the relationship between the anticipated operating conditions and the BN number.

Approx. BN of fresh oil (mg KOH/g oil)	Engines/operating conditions
20	Marine diesel oil (MDO) of a lower quality and with a high sulphur content or residual fuel with a sulphur content of less than 0.50%
30	Generally 16/24, 21/31, 23/30, 28/32 under normal operating conditions. For engines 27/38, 32/40, 32/44CR, 35/44DF, 48/60CR, 49/60, 49/60DF (marine application) and 51/60DF operating with 100% HFO with a sulphur content < 1.5% only.
40	Under unfavourable operating conditions and where the corresponding requirements for the oil service life and cleaning capacity exist, 16/24, 21/31, 23/30 and 28/32. In general 27/38, 32/40, 32/44CR, 35/44DF, 48/60CR, 49/60, 49/60DF (marine application) and 51/60DF for operation with residual fuel, provided the sulphur content is over 1.5%.

Lubricating oil (SAE 40) specification for residual fuel operation (HFO)

2025-10-07 - de

Lubricating oil (SAE 40) specification for residual fuel operation (HFO)

Approx. BN of fresh oil (mg KOH/g oil)	Engines/operating conditions
50	32/40, 32/44CR and 48/60CR, if the oil service life or engine cleanliness is insufficient with a BN number of 40 (high sulphur content of fuel, extremely low lubricating oil consumption).

Table 2: Base number to be used for various operating conditions

Operation with low-sulphur fuel

To comply with the emissions regulations, the sulphur content of fuels used nowadays varies. Fuels with low-sulphur content must be used in environmentally-sensitive areas (e.g. SECA). Fuels with higher sulphur content may be used outside SECA zones. In this case, the BN number of the lube oil selected must satisfy the requirements for operation using fuel with high-sulphur content. A lube oil with low BN number may only be selected if fuel with a low sulphur content is used exclusively during operation.
However, the practical results demonstrate that the most efficient engine operation is the factor ultimately determining the permitted additive content.

Oil for mechanical/hydraulic speed governors

Multigrade oil 5W40 should ideally be used in mechanical-hydraulic controllers with a separate oil sump, unless the technical documentation for the speed governor specifies otherwise. If this oil is not available when filling, 15W40 oil may be used instead in exceptional cases. In this case, it makes no difference whether synthetic or mineral-based oils are used.

The military specification applied for these oils is NATO O-236.

Experience with the drive engine L27/38 has shown that the operating temperature of the Woodward controller UG10MAS and corresponding actuator for UG723+ can reach temperatures higher than 93 °C. In these cases, we recommend using synthetic oil such as Castrol Alphasyn HG150.

Hydraulic oil for engines with VVT controller

Hydraulic oil HLP 46 (DIN 51502) or ISO VG 46 (DIN 51519) must be used according to the specification DIN 51524-2. Mixing hydraulic oils from different manufacturers is not permitted.

Lubricating oil additives

The use of other additives in conjunction with the lubricating oil or the mixing of different brands (oils from different manufacturers and different brands from the same manufacturer) is not permitted, as this can affect the performance of existing additives, which have been carefully matched to each other and have also been specially adapted to the base oil.

Oil during operation

There are no prescribed oil change intervals for Everllence medium speed engines. The oil properties must be analysed monthly. The oil must therefore be suitable for the intended purpose and meet the defined limit values as per the table. If this is the case, the oil can continue to be used. See table Limit values for used lube oil.

The quality can only be maintained if it is purified via a separator or an otherwise suitable device.

Temporary operation with distillate fuel

Due to current and future emissions regulations, the use of residual fuel in designated areas is not possible. Instead of this, a low-sulphur diesel fuel must be used in these areas.

If the duration of the operation with low-sulphur diesel fuel is limited to less than 1,000 h, a lubricating oil that is intended for residual fuel operation (BN 30–55 mg KOH/g) can continue to be used during this time.

If the temporary operation with low-sulphur diesel fuel lasts longer than 1,000 h and is then operated with residual fuel again after that, a lubricating oil with a BN of 20 must be used. If the BN 20 lubricating oil is from the same

2025-10-07 - de

brand as the lubricating oil used in the HFO operation with high BN (40 or 50), no oil change is required for the switch. It is sufficient to use BN 20 oil to top up the used lubricating oil.

If you want to use residual fuel again, you must switch back in good time to a lubricating oil with a higher BN (30–55). If the lubricating oil with the higher BN is from the same brand as the BN 20, the switch can also be made without changing oil. To do this, approx. 2 weeks before operating again with residual fuel, use the lubricating oil with the higher BN (30–55) to top up the consumed lubricating oil.

	Limit value	Procedure
Viscosity at 40 °C	110–220 mm²/s	ASTM D7042, ASTM D445, DIN EN 16896 or ISO 3104
Base number (BN)	at least 50 % of fresh oil	ISO 3771
Flash point (PM)	at least 185 °C	ISO 2719
Water content	max. 0.2 % (max. 0.5 % for brief periods)	DIN 51777 or ASTM D6304
n-heptane insoluble	max. 1.5 %	DIN 51592 or IP 316
Metal content	dependent on engine type and operating conditions	–
Guide value only Fe Cr Cu Pb Sn Al	 max. 50 ppm max. 10 ppm max. 15 ppm max. 20 ppm max. 10 ppm max. 20 ppm	ASTM D5185 or DIN 51399-1

Table 3: Limit values for used lube oil

Tests

A monthly analysis of lube oil samples is mandatory for safe engine operation. We can analyse samples for customers in the Everllence PrimeServLab.

To guarantee the safety of the crew and to obtain a representative sample, sampling must take place in accordance with valid Everllence operating instructions.

NOTICE

No liability when using these oils

Everllence is not liable for any problems that occur when using these oils.

Lubricating oil (SAE 40) specification for residual fuel operation (HFO)

2025-10-07 - de

Lubricating oil (SAE 40) specification for residual fuel operation (HFO)

This page is intentionally left blank

2025-10-07 - de

Lubricating oil (SAE 40) specification for operation with DMA/DMB, DFA, DFB

General

The specific output achieved by modern diesel engines combined with the use of fuels that satisfy the quality requirements more and more frequently increase the demands on the performance of the lubricating oil which must therefore be carefully selected.

Lubricating oils contain additives that, amongst other things, ensure dirt absorption capability, cleaning of the engine and the neutralisation of acidic combustion products.

Only lubricating oils that have been approved by Everllence may be used. These are listed under Lubrication.

Specifications

The doped lubricating oil must have the following properties:

Neutralization capacity

The neutralization capacity (DIN ISO 3771) must be so high that the acidic products produced during combustion are neutralized. The reaction time of the additives must be matched to the process in the combustion chamber.

Additional requirements

Fresh oil must not contain water or other contaminants.

Lubricating oil selection

Engine	SAE class
16/24, 21/31, 27/38, 23/30, 28/32, 32/40, 32/44CR, 35/44DF, 48/60CR, 49/60, 49/60DF, 51/60DF, 51/60R, 51/60R-DF-M	40

Table 1: Viscosity (SAE class) of lubricating oils

Oil quality

Only lubricating oils approved by Everllence may be used. Lubricating oils of military specification O-278 can be used if they are listed under Lubrication in the list of currently approved lubricating oils.

The operating conditions of the engine and the quality of the fuel determine the additive fractions the lube oil should contain. If marine diesel oil with a high sulphur content of 1.0 up to 1.5 weight % is used, a base number (BN) of approx. 20 should be selected. However, the operating results that ensure the most efficient engine operation ultimately determine the additive content.

Oil for mechanical/hydraulic speed governors

Multigrade oil 5W40 should ideally be used in mechanical-hydraulic controllers with a separate oil sump, unless the technical documentation for the speed governor specifies otherwise. If this oil is not available when filling, 15W40 oil may be used instead in exceptional cases. In this case, it makes no difference whether synthetic or mineral-based oils are used.

The military specification applied for these oils is NATO O-236.

Experience with the drive engine L27/38 has shown that the operating temperature of the Woodward controller UG10MAS and corresponding actuator for UG723+ can reach temperatures higher than 93 °C. In these cases, we recommend using synthetic oil such as Castrol Alphasyn HG150.

Lubricating oil (SAE 40) specification for operation with DMA/DMB, DFA, DFB

2025-09-02 - de

Lubricating oil (SAE 40) specification for operation with DMA/DMB, DFA, DFB

Lubricating oil additives

The use of other additives in conjunction with the lubricating oil or the mixing of different brands (oils from different manufacturers and different brands from the same manufacturer) is not permitted, as this can affect the performance of existing additives, which have been carefully matched to each other and have also been specially adapted to the base oil.

Selection of lubricating oils/ warranty

Most oil manufacturers have close and constant contacts with engine manufacturers and can therefore specify which oil from their own product line is approved by the engine manufacturer for the application. Regardless of this information, lubricating oil manufacturers are always liable for the quality and properties of their products. If you have any questions, we will be happy to provide you with further information.

Oil during operation

There are no prescribed oil change intervals for Everllence medium speed engines. The oil properties must be analysed monthly. The oil must therefore be suitable for the intended purpose and meet the defined limit values as per the table. If this is the case, the oil can continue to be used. See table Limit values for used lube oil.

The quality can only be maintained if it is purified via a separator or an otherwise suitable device.

Tests

A monthly analysis of lube oil samples is mandatory for safe engine operation. We can analyse samples for customers in the Everllence PrimeServLab.

To guarantee the safety of the crew and to obtain a representative sample, sampling must take place in accordance with valid Everllence operating instructions.

⚠ WARNING

Handling of operating fluids

Handling of operating fluids can cause serious injury and damage to the environment.

- Observe safety data sheets of the operating fluid supplier.

The list of the currently approved lubricating oils is available at Lubrication.

NOTICE

No liability when using these oils

Everllence is not liable for any problems that occur when using these oils.

	Limit value	Procedure
Viscosity at 40 °C	110–220 mm²/s	ASTM D7042, ASTM D445, DIN EN 16896 or ISO 3104
Base number (BN)	at least 50 % of fresh oil	ISO 3771
Flash point (PM)	at least 185 °C	ISO 2719
Water content	max. 0.2 % (max. 0.5 % for brief periods)	DIN 51777 or ASTM D6304
n-heptane insoluble	max. 1.5 %	DIN 51592 or IP 316

2025-09-02 - de

	Limit value	Procedure
Metal content	dependent on engine type and operating conditions	–
Guide value only Fe Cr Cu Pb Sn Al	 max. 50 ppm max. 10 ppm max. 15 ppm max. 20 ppm max. 10 ppm max. 20 ppm	ASTM D5185 or DIN 51399-1

Table 2: Limit values for used lube oil

Lubricating oil (SAE 40) specification for operation with DMA/DMB, DFA, DFB

2025-09-02 - de

Lubricating oil (SAE 40) specification for operation with DMA/DMB, DFA, DFB

This page is intentionally left blank

2025-09-02 - de

Specific lubricating oil consumption - SLOC

General

Engine type	RPM	SLOC [g/kWh]	1) Max. [l/cyl 24h]
L16/24, L16/24S	1000/1200	0.4 - 0.8	2.5
L21/31, L21/31S, L21/31 Mk1.1, L21/31 Mk2, L21/31DF-M	900/1000	0.4 - 0.8	5.0
L23/30H, L23/30DF	720/750	0.4 - 0.8	2.9
L23/30H Mk2, L23/30S	720/750	0.4 - 0.8	3.2
L23/30H Mk3	720/750	0.4 - 0.8	3.8
L23/30H, L23/30DF, L23/30S-DF, L23/30A	900	0.4 - 0.8	3.6
L23/30H Mk2, L23/30S	900	0.4 - 0.8	4.0
L23/30H Mk3	900	0.4 - 0.8	4.5
L27/38, L27/38S, L27/38 Mk2 (330/340 kW/cyl)	720/750/800	0.4 - 0.8	7.5
L27/38 (350/365 kW/cyl)	720/750/800	0.4 - 0.8	8.2
L27/38 Mk2 (410 kW/cyl)	900	0.4 - 0.8	9.3
L28/32H, L28/32S, L28/32DF, L28/32S-DF	720/750	0.4 - 0.8	4.7
L28/32A	775	0.4 - 0.8	5.5
V28/32S	720/750	0.4 - 0.8	5.2

In the Engine performance data calculation program MAN-Projedat the figures 0.6+20% g/kWh are used as an average SLOC value for calculation of Operation Expenses (OPEX), “Total cost of ownership” etc. When the engine is new or newly overhauled the SLOC can be lower than 0.4 g/kWh without causing concerns.

Increased SLOC values might be observed just before overhaul. Note “*1) Max Lubrication oil consumption per cyl per 24 hours*”

Description

Please note

- Only maximum continuous rating (P_{MCR} (kW)) should be used in order to evaluate the SLOC.
- During engine running-in the SLOC may exceed the values stated.

The following formula is used to calculate the SLOC:

$$\text{SLOC [g/kWh]} = \frac{(\text{lubricating oil added - A1 - A2 [dm}^3\text{]} \times \rho_{lub\ oil}\ \text{[kg/m}^3\text{]}}{\text{run.hrs.period} \times P_{MCR}\ \text{[kW]}}$$

In order to evaluate the correct engine SLOC, the following circumstances must be noticed and subtracted from the engine SLOC:

2025-03-19 - en

A1:

- Desludging interval and sludge amount from the lubricating oil separator (or automatic lubricating oil filters). The expected lubricating oil content of the sludge amount is 30%.

The following does also have an influence on the SLOC and must be considered in the SLOC evaluation:

A2:

- Lubricating oil evaporation
- Lubricating oil leakages
- Lubricating oil losses at lubricating oil filter exchange

The lubricating oil density, ρ @ 15°C must be known in order to convert ρ to the present lubricating oil temperature in the base frame. The following formula is used to calculate ρ:

$$\rho_{lub\ oil}\ [kg/m^3] = \rho_{lub\ oil\ @\ 15°C}\ [kg/m^3] - 0.64 \times (t_{lub\ oil}\ [°C] - 15)$$

The engine maximum continuous design rating (P_{MCR}) must always be used in order to be able to compare the individual measurements, and the running hours since the last lubricating oil adding must be used in the calculation. Due to inaccuracy *) at adding lubricating oil, the SLOC can only be evaluated after 1,000 running hours or more, where only the average values of a number of lubricating oil addings are representative.

NOTICE

***) A deviation of ± 1 mm with the dipstick measurement must be expected, which corresponds uptill ± 0.1 g/kWh, depending on the engine type.**

2025-03-19 - en

Plant / Ship
Lube oil consumption

Engine type:_____ **Engine # :**_____

Lube oil brand/type:_____

Density @15 C:_____ **[kg/m3]**

Date	Run. hrs [h]	Add. Lube oil [dm³]	A1 + A2 [dm³]	L.O.Temperature [°C]	SLOC [g/kWh]	Remarks

2025-03-19 - en

This page is intentionally left blank

Separator unit

Separator unit

Continuous lubricating oil cleaning during engine operation is mandatory. An optimal lubricating oil treatment is fundamental for a reliable working condition of the engine.

If the lubricating oil is circulating without a separator unit in operation, the lubricating oil will gradually be contaminated by products of combustion, water and/or acid. In some instances cat-fines may also be present.
In order to prolong the lubricating oil lifetime and remove wear elements, water and contaminants from the lubricating oil, it is mandatory to use a by-pass separator unit.
The separator unit will reduce the carbon residue content and other contaminants from combustion on engines operated on HFO, and keep the amount within MAN Energy Solutions recommendation, on condition that the separator unit is operated according to MAN Energy Solutions recommendations.

When operating a cleaning device, the following recommendations must be observed:

- The optimum cleaning effect is achieved by keeping the lubricating oil in a state of low viscosity for a long period in the separator bowl.
- Sufficiently low viscosity is obtained by preheating the lubricating oil to a temperature of 95°C - 98°C, when entering the separator bowl.
- The capacity of the separator unit must be adjusted according to MAN Energy Solutions recommendations.

Slow passage of the lubricating oil through the separator unit is obtained by using a reduced flow rate and by operating the separator unit 24 hours a day, stopping only for maintenance, according to maker's recommendation.

Lubricating oil preheating

The installed heater on the separator unit ensures correct lubricating oil temperature during separation. When the engine is at standstill, the heater can be used for two functions:

- The oil from the sump is preheated to 95 – 98 °C by the heater and cleaned continuously by the separator unit.
- The heater can also be used to maintain an oil temperature of at least 40 °C, depending on installation of the lubricating oil system.

Cleaning capacity

Normally, it is recommended to use a self-cleaning filtration unit in order to optimize the cleaning period and thus also optimize the size of the filtration unit. Separator units for manual cleaning can be used when the reduced effective cleaning time is taken into consideration by dimensioning the separator unit capacity.

2025-03-19 - en

The centrifuging process in separator bowl

Efficient lubricating oil cleaning relies on the principle that - provided the through-put is adequate and the treatment is effective - an equilibrium condition can be reached, where the engine contamination rate is balanced by the centrifuge separation rate i.e.:

- Contaminant quantity added to the lubricating oil per hour = contaminant quantity removed by the centrifuge per hour.

It is the purpose of the centrifuging process to ensure that this equilibrium condition is reached, with the lubricating oil insolubles content being as low as possible.

Since the cleaning efficiency of the centrifuge is largely dependent upon the flow rate, it is very important that this is optimised.

A centrifuge can be operated at greatly varying flow rates (Q).

Practical experience has revealed that the content of insolubles, before and after the centrifuge, is related to the flow rate as shown in Fig. 1.

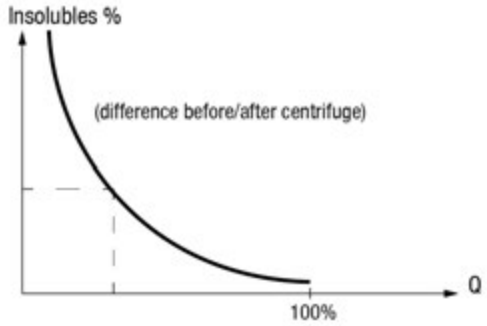

Figure 1: .

Fig. 1 illustrates that the amount of insolubles removed will decrease with rising flow rate (Q).

It can be seen that:

- At low flow rate (Q), only a small portion of the lubricating oil is passing the centrifuge/hour, but is being cleaned effectively.
- At high flow rate (Q), a large quantity of lubricating oil is passing the centrifuge/hour, but the cleaning is less effective.

Thus, by correctly adjusting the flow rate, an optimal equilibrium cleaning level can be obtained (Fig. 2).

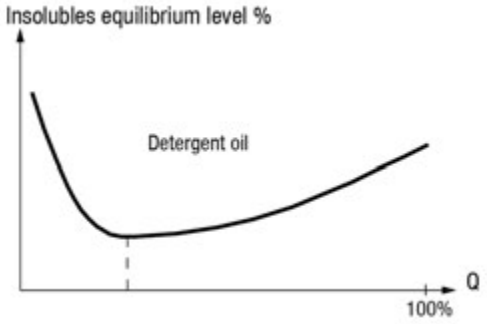

Figure 2: .

2025-03-19 - en

This minimum contamination level is obtained by employing a suitable flow rate that is only a fraction of the stated maximum capacity of the centrifuge (*see the centrifuge manual*).

The most important factor is the particle size (risk of scratching and wear of the bearing journals). In general the optimum centrifuge flow rate for a detergent lubricating oil is about 25% of the maximum centrifuge capacity.

Operation flow

In order to calculate the required operation flow through the separator unit, MDT recommends to apply the following formula:

$$Q = \frac{P \times 1.36 \times n}{t}$$

Q	=	required operation flow [l/h]
P	=	MCR (maximum continuous rating) [kW]
t	=	actual effective separator unit separating time per day [hour] (23.5 h separating time and 0.5 h for sludge discharge = 24 h/day)
n	=	number of turnovers per day of the theoretical oil volume corresponding to 1.36 [l/kW] or 1 [l/HP]

The following values for "n" are recommended:

n	=	6 for HFO operation (residual)
n	=	4 for MDO operation
n	=	3 for distillate fuel

Example 1
For multi-engine plants, one separator unit per engine in operation is recommended.

For example, for a 1,000 kW engine operating on HFO and connected to a self-cleaning separator unit, with a daily effective separating period of 23.5 hours, the calculation is as follows:

$$Q = \frac{1000 \times 1.36 \times 6}{23.5} = 347 \text{ l/h}$$

2025-03-19 - en

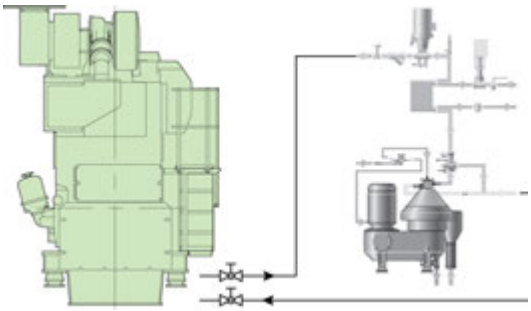

Figure 3: One separator per engine plant

Example 2 (GenSet)
As an alternative, one common separator unit for three engines can be installed, with one in reserve if possible.

For the calculation in this example it is necessary include the combined average power demand of the multi-engine plant. The load profile experienced for the majority of merchant vessels is that the average power demand is around 43-50% of the total GenSet power installed. With three identical engines this corresponds to 1.3-1.5 times the power of one engine.

- Bulk carrier and tankers : ~1.3 times the power of one engine
- Container vessel : ~1.5 times the power of one engine

For example, for a bulk carrier with three 1,000 kW engines operating on HFO and connected to a common self-cleaning separator unit, with a daily effective separating period of 23.5 hours, the calculation is as follows:

$$Q = \frac{1.3 \times 1000 \times 1.36 \times 6}{23.5} = 451 \text{ l/h}$$

Bulk carrier and tankers

Separator unit installation

With multi-engine plants, one separator unit per engine in operation is recommended (*see figure 3*), but if only one separator unit is in operation, the following layout can be used:

- A common separator unit (*see figure 4*) can be installed, with one in reserve, if possible, for operation of all engines through a pipe system, which can be carried out in various ways. The aim is to ensure that the separator unit is only connected to one engine at a time. Thus there will be no suction and discharging from one engine to another.

It is recommended that inlet and outlet valves are connected so that they can only be changed over simultaneously.

With only one engine in operation there are no problems with separating, but if several engines are in operation for some time it is recommended to split up the separation time in turns on all operating engines.

With 2 out of 3 engines in operation the 23.5 hours separating time must be split up in around 4-6 hours intervals between changeover.

2025-03-19 - en

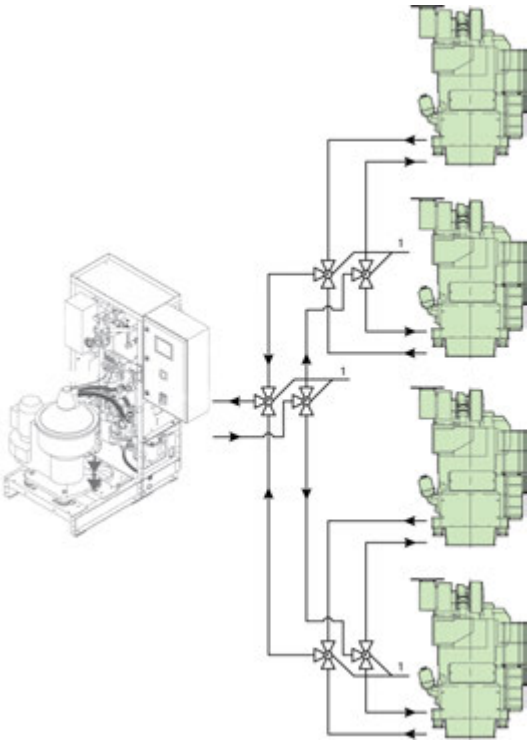

1 Interconnected valves

Figure 4: One common separator unit for multi-engine installation

Stokes' law

The operating principles of centrifugal separation are based on Stokes' Law.

$$V = \frac{d^2 (\rho_p - \rho_l)\, r\omega^2}{18\mu}$$

V	=	settling velocity [m/sec]
$r\omega^2$	=	acceleration in centrifugal field [m/sec^2]
d	=	diameter of particle [m]
ρ_p	=	density of particle [kg/m^3]
ρ_l	=	density of medium [kg/m^3]
μ	=	viscosity of medium [kg/m, sec.]

The rate of settling (V) for a given capacity is determined by Stokes' Law. This expression takes into account the particle size, the difference between density of the particles and the lubricating oil, and the viscosity of the lubricating oil.

Density and viscosity are important parameters for efficient separation. The greater the difference in density between the particle and the lubricating oil, the higher the separation efficiency. The settling velocity increases in inverse proportion to viscosity. However, since both density and viscosity vary with temperature, separation temperature is the critical operating parameter.

Particle size is another important factor. The settling velocity increases rapidly with particle size. This means that the smaller the particle, the more challenging the separation task. In a centrifuge, the term ($r\omega^2$) represents the centrifu-

2025-03-19 - en

gal force which is several thousand times greater than the acceleration due to gravitational force. Centrifugal force enables the efficient separation of particles which are only a few microns in size.

The separation efficiency is a function of:

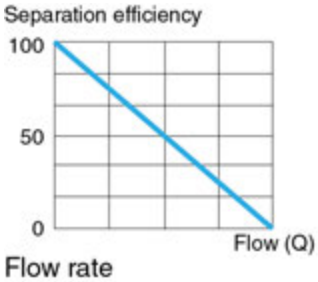

Flow rate

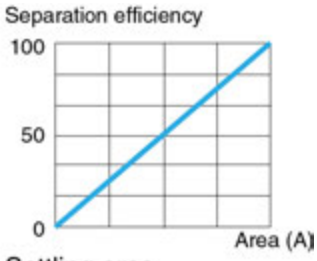

Settling area

Settling velocity

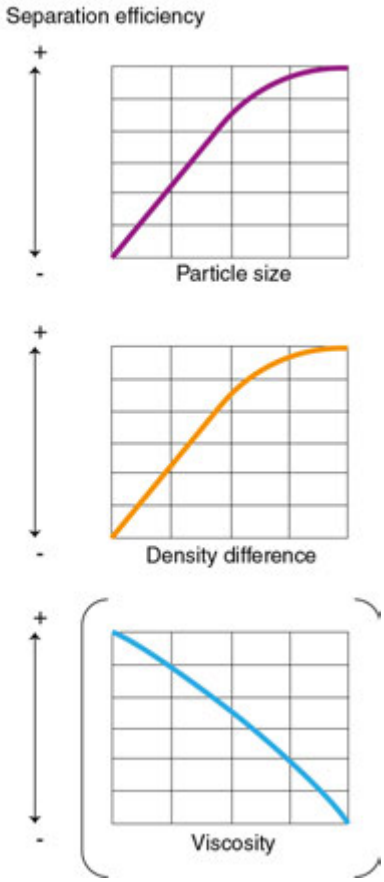

Operating parameters

Various operating parameters affect separation efficiency. These include temperature, which controls both lubricating oil viscosity and density, flow rate and maintenance.

2025-03-19 - en

Temperature of lubricating oil before separator unit

It is often seen that the lubricating oil pre-heaters are undersized, have very poor temperature control, the steam supply to the pre-heater is limited or the temperature set point is too low.

Often the heater surface is partly clogged by deposits. These factors all lead to reduced separation temperature and hence the efficiency of the separator unit. In order to ensure that the centrifugal forces separate the heavy contaminants in the relatively limited time that they are present in the separator bowl, the separator unit must always be operated with an inlet temperature of 95-98°C for lubricating oil.

A control circuit including a temperature transmitter and a PI-type controller with accuracy of ±2°C must be installed. If steam-heated, a correctly sized steam valve should be fitted with the right KvS value. The steam trap must be a mechanical float type. The most common heaters on board are steam heaters. This is due to the fact that steam in most cases is available at low cost.

Most ships are equipped with an exhaust boiler utilizing the exhaust gases to generate steam.

A large proportion of smaller tonnage does, however, use electric heaters.

It is essential to keep the incoming oil temperature to the separator unit steady with only a small variation in temperature allowed (maximum ±2°C).

The position of the interface between oil and water in the separator bowl is a result of the density and the viscosity of the oil, which in turn depends on the temperature.

Flow rate

It is known that separation efficiency is a function of the separator unit's flow rate. The higher the flow rate, the more particles are left in the oil and therefore the lower the separation efficiency. As the flow rate is reduced, the efficiency with which particles are removed increases and cleaning efficiency thus improves. It is, however, essential to know at what capacity adequate separation efficiency is reached in the specific case.

In principle, there are three ways to control the flow:

- Adjustment of the built-in safety valve on the pump.

  This method is NOT recommended since the built-on valve is nothing but a safety valve.

  The opening pressure is often too high and its characteristic far from linear.

  In addition, circulation in the pump may result in oil emulsions and cavitation in the pump.
- A flow regulating valve arrangement on the pressure side of the pump, which bypasses the separator unit and re-circulates part of the untreated lubricating oil back to the treated oil return line, from the separator unit and NOT directly back to the suction side of the pump.

  The desired flow rate is set manually by means of the flow regulating valve. Further, the requirement for backpressure in the clean oil outlet MUST also be fulfilled, helping to maintain the correct interface position.
- Speed control of the pump motor with a frequency converter or a 2-speed motor.

2025-03-19 - en

This is a relatively cheap solution today and is a good alternative for flow control.

Maintenance

Proper maintenance is an important, but often overlooked operating parameter that is difficult to quantify. If the bowl is not cleaned in time, deposits will form on the bowl discs, the free channel height will be reduced, and flow velocity increases. This further tends to drag particles with the liquid flow towards the bowl's centre resulting in decreased separation efficiency.

2025-03-19 - en

Treatment and maintenance of lubricating oil

General

During operation of trunk engines the lubricating oil will gradually be contaminated by small particles originating from the combustion.

Engines operated on heavy fuels will normally increase the contamination due to the increased content of carbon residues and other contaminants.

Contamination of lubricating oil with either freshwater or seawater can also occur.

A certain amount of contaminants can be kept suspended in the lubricating oil without affecting the lubricating properties.

The condition of the lubricating oil must be kept under observation (on a regular basis) by analyzing oil samples. *See Section B 12 15 0 / 504.04 "Criteria for Cleaning/Exchange of Lubricating Oil"*.

The condition of the lubricating oil can be maintained / re-established by exchanging the lubricating oil at fixed intervals or based on analyzing oil samples.

The moving parts in the engine are protected by the built-on lubricating oil filter.

Operation on distillate fuels, Marine diesel oil (MDO), Marine gas oil (MGO), Low, Very low & Ultra low sulphur fuel oil (LSFO), (VLSFO), (ULSFO)

We recommend to install a built-on centrifugal filter as an additional filter to the built-on lubricating oil filter.

It is advisable to run bypass cleaning equipment continuously for engines operated on distillate fuels.

Operation on residual fuels, Heavy fuel oil (HFO) Low, Very low & Ultra low sulphur heavy fuel oil (LSFO), (VLSFO) (ULSFO)

HFO-operated engines require effective lubricating oil cleaning. In order to ensure a safe operation it is necessary to use supplementary cleaning equipment together with the built-on lubricating oil filter.

We recommend to install a built-on centrifugal by-pass filter as an additional filter to the built-on lubricating oil filter.

It is also mandatory to run cleaning equipment continuously for engines operated on residual fuels, as an optimal lubricating oil treatment is fundamental for a reliable working condition. Therefore it is mandatory to clean the lubricating oil with a bypass cleaning equipment, so that the wear rates are reduced and the lifetime of the engine is extended.

Bypass cleaning equipment

As a result of normal operation, the lubricating oil contains abraded particles and combustion residues which have to be removed by the bypass cleaning system and to a certain extent by the built-on lubricating oil filter as well.

2025-03-19 - en

With automatic mesh filters this can result in an undesirable and hazardous continuous flushing. In view of the high cost of cleaning equipment for removing micro impurities, this equipment is only rated for a certain proportion of the oil flowing through the engine since it is installed in a bypass.

The bypass cleaning equipment is operate continuously when the engine is in operation or at standstill.

For cleaning of lubricating oil the following bypass cleaning equipment can be used:

- Separator unit
- Decanter unit
- Self cleaning automatic bypass mesh filter
- Bypass depth filter

The decanter unit, the self-cleaning automatic bypass mesh filter and the bypass depth filter capacity must be adjusted according to maker's recommendations.

If the selected bypass cleaning equipment cannot remove water it is recommended to have portable separator available.

In case full flow filtration equipment is chosen, this must only be installed as in-line cleaning upstream to the built-on lubricating oil filter.

The most appropriate type of equipment for a particular application depends on the engine output, the type and amount of combustion residues, the annual operating time and the operating mode of the plant. Even with a relatively low number of operating hours there can be a great deal of combustion residues if, for instance, the engine is inadequately preheated and quickly accelerated and loaded.

Check of lubricating oil system

For cleaning of the lubricating oil system after overhauls and inspection of the lubricating oil piping system the following checks must be carried out:

1. Examine the piping system for leaks.
2. Retighten all bolts and nuts in the piping system.
3. Move all valves and cocks in the piping system. Lubricate valve spindles with graphite or similar.
4. Blow through drain pipes.
5. Check flexible connections for leaks and damages.
6. Check manometers and thermometers for possible damages.
7. Centrifugal by-pass filter can be used as indicator of lubricating oil system condition.
   Define a cleaning interval (ex. 100 hours). Check the sludge weight. If the sludge weight is raising please check separator and lubricating oil system condition in general.

Deterioration of oil

Oil seldomly loses its ability to lubricate, i.e. to form a friction-decreasing oil film, but it may become corrosive to the steel journals of the bearings in such a way that the surface of these journals becomes too rough and wipes the bearing surface.

2025-03-19 - en

In that case the bearings must be renewed, and the journals must also be polished. The corrosiveness of the lubricating oil is either due to far advanced oxidation of the oil itself (TAN) or to the presence of inorganic acids (SAN). In both cases the presence of water will multiply the effect, especially sea water as the chloride ions act as an inorganic acid.

Signs of deterioration

If circulating oil of inferior quality is used and the oxidative influence becomes grave, prompt action is necessary as the last stages in the deterioration will develop surprisingly quickly, within one or two weeks. Even if this seldomly happens, it is wise to be acquainted with the signs of deterioration.

These may be some or all of the following:

- Sludge precipitation in the separator unit multiplies
- Smell of oil becomes acrid or pungent
- Machined surfaces in the crankcase become coffee-brown with a thin layer of lacquer
- Paint in the crankcase peels off or blisters
- Excessive carbon is formed in the piston cooling chamber

In a grave case of oil deterioration the system must be cleaned thoroughly and refilled with new oil.

Oxidation of oils

At normal service temperature the rate of oxidation is insignificant, but the following factors will accelerate the process:

High temperature
If the coolers are ineffective, the temperature level will generally rise. A high temperature will also arise in electrical pre-heaters if the circulation is not continued for 5 minutes after the heating has been stopped, or if the heater is only partly filled with oil.

Catalytic action
Oxidation of the oil will be accelerated considerably if catalytic particles are present in the oil. Wear particles of copper are especially harmful, but also ferrous particles and rust are active. Furthermore, the lacquer and varnish oxidation products of the oil itself have an accelerating effect. Continuous cleaning of the oil is therefore important to keep the sludge content low.

Water washing

Water washing of HD oils (heavy duty) must not be carried out.

Water in the oil

If the TAN is low, a minor increase in the fresh water content of the oil is not immediately detrimental while the engine is in operation. Naturally, it should be brought down again as quickly as possible (below 0.2% water content, which is permissible, *see description "B 12 15 0/504.04 criteria for exchange of lube oil*"). If the engine is stopped while corrosion conditions are unsatisfactory, the crankshaft must be turned ½ - ¾ revolution once every hour by means of the

2025-03-19 - en

turning gear. Please make sure that the crankshaft stops in different positions, to prevent major damage to bearings and journals. The lubricating oil must be circulated and separated continuously to remove water.

Water in the oil may be noted by steam formation on the sight glasses, by appearance, or ascertained by immersing a piece of glass or a soldering iron heated to 200-300°C in an oil sample. If there is a hissing sound, water is present. If a large quantity of water has entered the lubricating oil system, it has to be removed. Either by sucking up sediment water from the bottom, or by replacing the oil in the sump. An oil sample must be analysed immediately for chloride ions.

2025-03-19 - en

Criteria for cleaning/exchange of lubricating oil

Replacement of lubricating oil

The expected lubricating oil lifetime in operation is difficult to determine. The lubricating oil lifetime is depending on the fuel oil quality, the lubricating oil quality, the lubricating oil consumption, the lubricating oil cleaning equipment efficiency and the engine operational conditions.

In order to evaluate the lubricating oil condition a sample should be drawn on regular basis at least once every three month or depending on the latest analysis result. The lubricating oil sample must be drawn before the filter at engine in operation. The sample bottle must be clean and dry, supplied with sufficient identification and should be closed immediately after filling. The lubricating oil sample must be examined in an approved laboratory or in the lubricating oil suppliers own laboratory.

A lubricating oil replacement or an extensive lubricating oil cleaning is required when the MAN Energy Solutions exchange criteria's have been reached.

Evaluation of the lubricating oil condition

Based on the analysis results, the following guidance are normally sufficient for evaluating the lubricating oil condition. The parameters themselves can not be jugded alonestanding, but must be evaluated together in order to conclude the lubricating oil condition.

1. Viscosity

Limit value:

	Normal value	min. value	max. value
SAE 30 [cSt@40° C]	95 - 125	75	160
SAE 30 [cSt@100° C]	11 - 13	9	15
SAE 40 [cSt@40° C]	135 - 165	100	220
SAE 40 [cSt@100° C]	13.5 - 15.0	11	19

Unit	:	cSt (mm^2/s)
Possible test method	:	ASTM D-445, DIN51562/53018, ISO 3104

Increasing viscosity indicates problems with insolubles, HFO contamination, water contamination, oxidation, nitration and low load operation. Decreasing viscosity is generally due to dilution with lighter viscosity oil.

2. Flash point

Min. value	:	185° C
Possible test method	:	ASTM D-92, ISO 2719

Normally used to indicate fuel dilution.

2025-03-19 - en

3. Water content

Max. value	:	0.2 %
Unit	:	Weight %
Possible test method	:	ASTM D4928, ISO 3733

Water can originate from separator, contaminated fuel oil, an engine cooling water leak or in minor amount formed as part of the combustion process. If water is detected also Sodium, Glycol or Boron content should be checked in order to confirm engine coolant leaks.

If ship installation have no separator unit it is recommend to have a portable separator available to remove water.

4. Base number

Min. value	:	The BN value should not be lower than 50% of fresh lubricating oil value, but minimum BN level never to be lower than 10-12 at operating on HFO!
Unit	:	mg KOH/g
Possible test method	:	ASTM D-2896, ISO 3771

The neutralization capacity must secure that the acidic combustion products, mainly sulphur originate from the fuel oil, are neutralized at the lube oil consumption level for the specific engine type. Gradually the BN will be reduced, but should reach an equilibrium.

5. Total acid number (TAN)

Max. value	:	3.0 acc. to fresh oil value
Unit	:	mg KOH/g
Possible test method	:	ASTM D-664

TAN is used to monitor oil degradation and is a measure of the total acids present in the lubricating oil derived from oil oxidation (weak acids) and acidic products of fuel combustion (strong acids).

6. Insolubles content

Max. value	:	1.5 % generally, depending upon actual dispersant value and the increase in viscosity
Unit	:	Weight %
Possible test method	:	ASTM D-893 procedure B in Heptane, DIN 51592

2025-03-19 - en

Additionally test : If the level in n-Heptane insolubles is considered high for the type of oil and application, the test could be followed by a supplementary determination in Toluene.

Total insolubles is maily derived from products of combustion blown by the piston rings into the crankcase. It also includes burnt lubricating oil, additive ash, rust, salt, wear debris and abrasive matter.

7. Metal content

Metal content	Remarks	Attention limits
Iron	Depend upon engine type and operating conditions	max. 50 ppm
Chromium		max. 10 ppm
Copper		max. 15 ppm
Lead		max. 20 ppm
Tin		max. 10 ppm
Aluminium		max. 20 ppm
Silicon		max. 20 ppm

2025-03-19 - en

This page is intentionally left blank

By-pass depth filter

General

The lube oil in a trunk diesel engine is constantly contaminated by combustion blow-by debris, and metal particles. The smaller combustion particles damage the oil and accelerate oil oxidation, thereby lead to decreased TBN, increased viscosity and finally lube oil change. However, most harmful to the engine parts are the solid 3 - 10 micron particles which cause wear, blockage, fatigue and polishing of cylinder liners, camshafts and journals/bearings. Effective removal of contaminants through an external bypass cleaning system will add further life to both engine and engine lube oil.

Bypass depth filters are easy to install and the depth filter insert has a very large dirt holding capacity. The bypass depth filters have low operational costs and are also almost maintenance free. All fine filter inserts have a 3 µm absolute filtration ratio and will remove particles, water and oil degradation products in one and the same operation.

The external bypass filter consists of a 3/0,8 (absolute/nominal) micron cellulose based depth filter, a filter supply pump and a frequency converter included in the control box The lube oil condition is maintained by filtering the oil through the external bypass depth filter continuously, when the engine is in operation as well as in standby. A certain ratio of lube oil circulation through the filter related to engine output(kW) and oil sump volume is necessary.
When oil temperature is low, a control system will automatically reduce the pump's rotation speed. This gives an approximately constant pressure drop over the filter inserts and thus optimum filter performance. Filter is equipped with patented back pressure system and continuous air by-pass
When filter inserts are nearly clogged a pre-warning will be present in the unit control display. When filter inserts are fully clogged the unit will shut down automatically and inserts needs replacement.

2023-11-07 - en

Filter specification

Range of application	:	Diesel engine lube oils
Max. operating pressure	:	6 bar
Test pressure	:	According to class rule
Max. operating temperature	:	120°C
Nominal width of connection flanges	:	ISO 8434-1 / BSPP Thread
Filter to be replaced at a pressure drop	:	2.1 bar
Grade of filtration	:	3 µm absolute: 98.7% of all solid particles >3 µm 0.8 µm nominal: 50% of all solid particles > 0.8 µm are retained in each pass.

The dirt holding capacity of one A 27/27 insert is 4 litres of evenly distributed solids. Filter units for MAN engines according to these guidelines contain 4, 8, 12, 16 pcs filter inserts.

- Degradation Products
  Oxidation by-products, resin / sludge, and varnish are retained by the cellulose material. The cellulose will retain approx. 4 kg of degradation products.
- Water Removal
  The water absorption potential is up to 50% (i.e. 2000 mL H2O) of the total contaminant holding capacity.

NOTICE Regardless selection of filter solution will condition of lubrication oil in engine still have to be evaluated and need to fulfil requirement in description*B 12 15 0 "Criteria for cleaning/exchange of lubrication oil".*

Figure 1: Clean and dirty filter insert

2023-11-07 - en

L16/24 - HFO operation

Cylinder [No.]	Engine power [kW]	Filter unit	Flow [l/h]
5 (1200/1000 rpm)	500/450	HDU 27/108	110
6 (1200/1000 rpm)	660/570	HDU 27/108	110
7 (1200/1000 rpm)	770/665	HDU 27/108	180
8 (1200/1000 rpm)	880/760	HDU 27/108	180
9 (1200/1000 rpm)	990/855	HDU 27/108	180

L16/24 - MDO/MGO operation (Exclusively)

Cylinder [No.]	Engine power [kW]	Filter unit	Flow [l/h]
5 (1200/1000)	500/450	HDU 27/108	110
6 (1200/1000)	660/570	HDU 27/108	110
7 (1200/1000)	770/665	HDU 27/108	110
8 (1200/1000)	880/760	HDU 27/108	110
9 (1200/1000)	990/855	HDU 27/108	110

L21/31 - HFO operation

Cylinder [No.]	Engine power [kW]	Filter unit	Flow [l/h]
5 (900/1000 rpm)	1000 kW	HDU 27/108	240
6 (900/1000 rpm)	1320 kW	HDU 27/108	300
7 (900/1000 rpm)	1540 kW	HDU 27/108	455
8 (900/1000 rpm)	1760 kW	HDU 27/108	455
9 (900/1000 rpm)	1980 kW	HDU 27/108	455

L21/31 - MDO/MGO operation (Exclusively)

Cylinder [No.]	Engine power [kW]	Filter unit	Flow [l/h]
5 (900/1000 rpm)	1000 kW	HDU 27/108	180
6 (900/1000 rpm)	1320 kW	HDU 27/108	180
7 (900/1000 rpm)	1540 kW	HDU 27/108	240
8 (900/1000 rpm)	1760 kW	HDU 27/108	300
9 (900/1000 rpm)	1980 kW	HDU 27/108	300

2023-11-07 - en

L27/38 - HFO operation

Cylinder [No.]	Engine power [kW]	Filter unit	Flow [l/h]
5 (720/750 rpm)	1500/1600	HDU 427/54	455
6 (720/750 rpm)	1980	HDU 427/81	455
7 (720/750 rpm)	2310	HDU 427/81	510
8 (720/750 rpm)	2640	HDU 427/108	710
9 (720/750 rpm)	2970	HDU 427/108	710

L27/38 - MDO/MGO operation (Exclusively)

Cylinder [No.]	Engine power [kW]	Filter unit	Flow [l/h]
5 (720/750 rpm)	1500/1600	HDU 27/108	240
6 (720/750 rpm)	1980/2100	HDU 27/108	300
7 (720/750 rpm)	2310/2450	HDU 27/108	455
8 (720/750 rpm)	2640/2800	HDU 27/108	455
9 (720/750 rpm)	2970/3150	HDU 27/108	455

L23/30H - Mk2 - HFO operation

Cylinder [No.]	Engine power [kW]	Filter unit	Flow [l/h]
5 (720/750 rpm)	535/525	HDU 27/108	145
5 (720/750 rpm)	650/675	HDU 27/108	145
5 (720/750 rpm)	710/740	HDU 27/108	145
6 (720/750 rpm)	852/888	HDU 27/108	240
6 (900 rpm)	1050	HDU 27/108	240
7 (720 rpm)	994	HDU 27/108	240
7 (750/900 rpm)	1036/1225	HDU 27/108	240
8 (720/750/900 rpm)	1136/1184/1400	HDU 27/108	300

L23/30H - Mk2 - MDO/MGO operation (Exclusively)

Cylinder [No.]	Engine power [kW]	Filter unit	Flow [l/h]
5 (720/750)	535/525	HDU 27/108	110
5 (720/750)	650/675	HDU 27/108	110
5 (720/750)	710/740	HDU 27/108	145
6 (720/750/900 rpm)	852/888/1050	HDU 27/108	145

2023-11-07 - en

Cylinder [No.]	Engine power [kW]	Filter unit	Flow [l/h]
7 (720/750/900 rpm)	994/1036/1225	HDU 27/108	145
8 (720/750/900 rpm)	1136/1184/1400	HDU 27/108	145

L23/30H - Mk3 - HFO operation

Cylinder [No.]	Engine power [kW]	Filter unit	Flow [l/h]
5 (720 rpm)	500	HDU 27/108	145
5 (720/750 rpm)	850/885	HDU 27/108	240
6 (720/750 rpm)	1020/1062	HDU 27/108	240
7 (720/750 rpm)	1190/1239	HDU 27/108	240
8 (720/750 rpm)	1360/1416	HDU 27/108	300
9 (720/750 rpm)	1530/1593	HDU 27/108	300

L23/30H - Mk3 - MDO/MGO Operation

Cylinder [No.]	Engine power [kW]	Filter unit	Flow [l/h]
5 (720 rpm)	500	HDU 27/108	110
5 (720/750 rpm)	850/885	HDU 27/108	145
6 (720/750 rpm)	1020/1062	HDU 27/108	145
7 (720/750 rpm)	1190/1239	HDU 27/108	145
8 (720/750 rpm)	1360/1416	HDU 27/108	145
9 (720/750 rpm)	1530/1593	HDU 27/108	240

L28/32H - HFO operation

Cylinder [No.]	Engine power [kW]	Filter unit	Flow [l/h]
5 (720/750 rpm)	1050/1100	HDU 27/108	240
6 (720/750 rpm)	1260/1320	HDU 27/108	240
7 (720/750 rpm)	1470/1540	HDU 427/81	455
8 (720/750 rpm)	1680/1760	HDU 427/81	455
9 (720/750 rpm)	1890/1980	HDU 427/81	510

L28/32H - MDO/MGO operation (Exclusively)

Cylinder [No.]	Engine power [kW]	Filter unit	Flow [l/h]
5 (720/750 rpm)	1050/1100	HDU 27/108	180
6 (720/750 rpm)	1260/1320	HDU 27/108	240

2023-11-07 - en

Cylinder [No.]	Engine power [kW]	Filter unit	Flow [l/h]
7 (720/750 rpm)	1470/1540	HDU 27/108	240
8 (720/750 rpm)	1680/1760	HDU 27/108	300
9 (720/750 rpm)	1890/1980	HDU 27/108	300

L23/30DF - MDO/MGO operation

Cylinder [No.]	Engine power [kW]	Filter unit	Flow [l/h]
5 (720/750 rpm)	625/625	HDU 27/108	110
6 (720/750/900 rpm)	750/750/900	HDU 27/108	145
7 (720/750/900 rpm)	875/875/1050	HDU 27/108	145
8 (720/750/900 rpm)	1000/1000/1200	HDU 27/108	145

L28/32DF - MDO/MGO operation

Cylinder [No.]	Engine power [kW]	Filter unit	Flow [l/h]
5 (720/750 rpm)	1000	HDU 27/108	180
6 (720/750 rpm)	1200	HDU 27/108	180
7 (720/750 rpm)	1400	HDU 27/108	240
8 (720/750 rpm)	1600	HDU 27/108	240
9 (720/750 rpm)	1800	HDU 27/108	240

V28/32S - HFO Operation

Cylinder [No.]	Engine power [kW]	Filter unit	Flow [l/h]
16 (720/750 rpm)	3600/3760	HDU 427/108	940
18 (720/750 rpm)	4050/4230	HDU 427/108	940

V28/32S - MDO/MGO Operation (Exclusively)

Cylinder [No.]	Engine power [kW]	Filter unit	Flow [l/h]
16 (720/750 rpm)	3600/3760	HDU 427/108	510
18 (720/750 rpm)	4050/4230	HDU 427/108	510

2023-11-07 - en

HDU 27/108

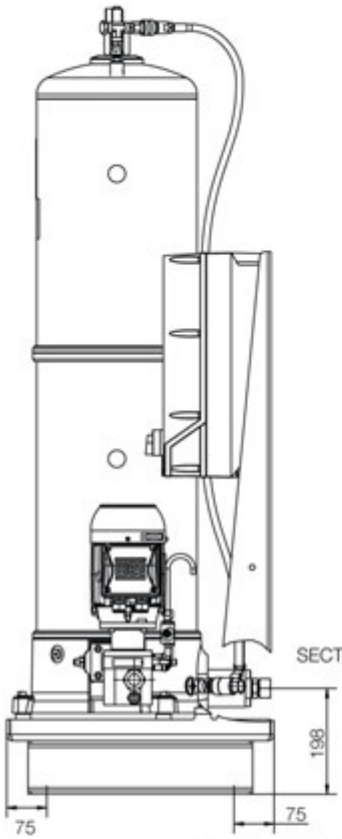

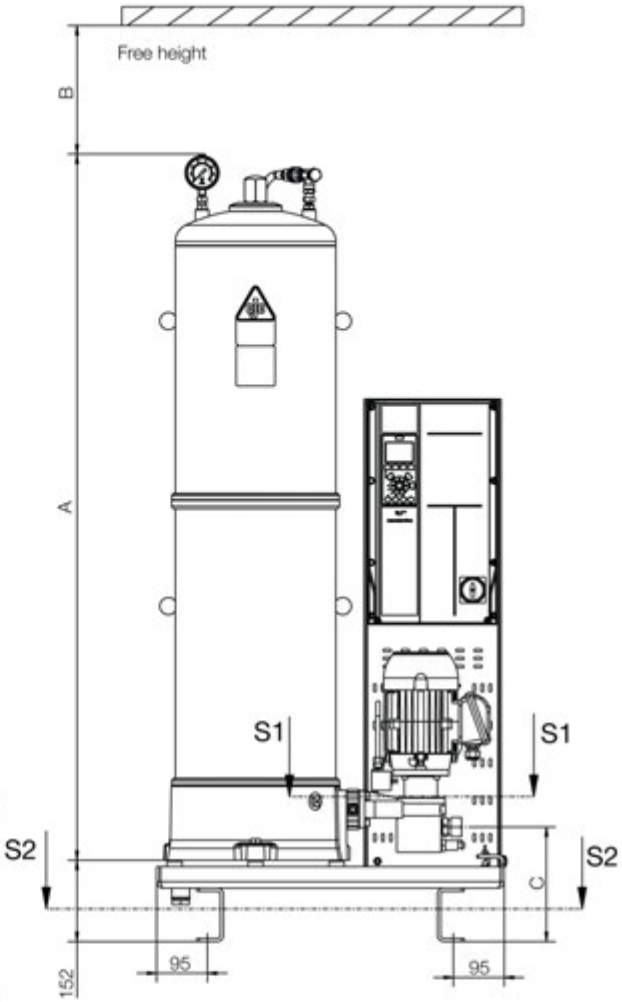

A	B	C	D
1320	600	247	305
1320	600	247	305
1320	600	247	305
1320	600	247	305
1320	600	247	305
1320	600	214	262
1320	600	247	305
1320	600	247	305
1320	600	247	305
1320	600	214	262
1320	600	247	305
1320	600	247	305

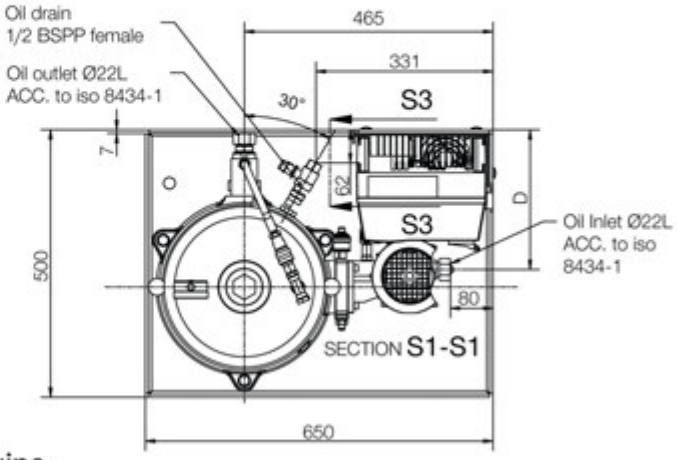

Pipe Installation
Oil inlet: to be connected to C4 on engine.
Oil outlet: to be connected to C3 on engine.
Unit must be installed according to valid solas regulations.

2023-11-07 - en

HDU 427/54-81-108

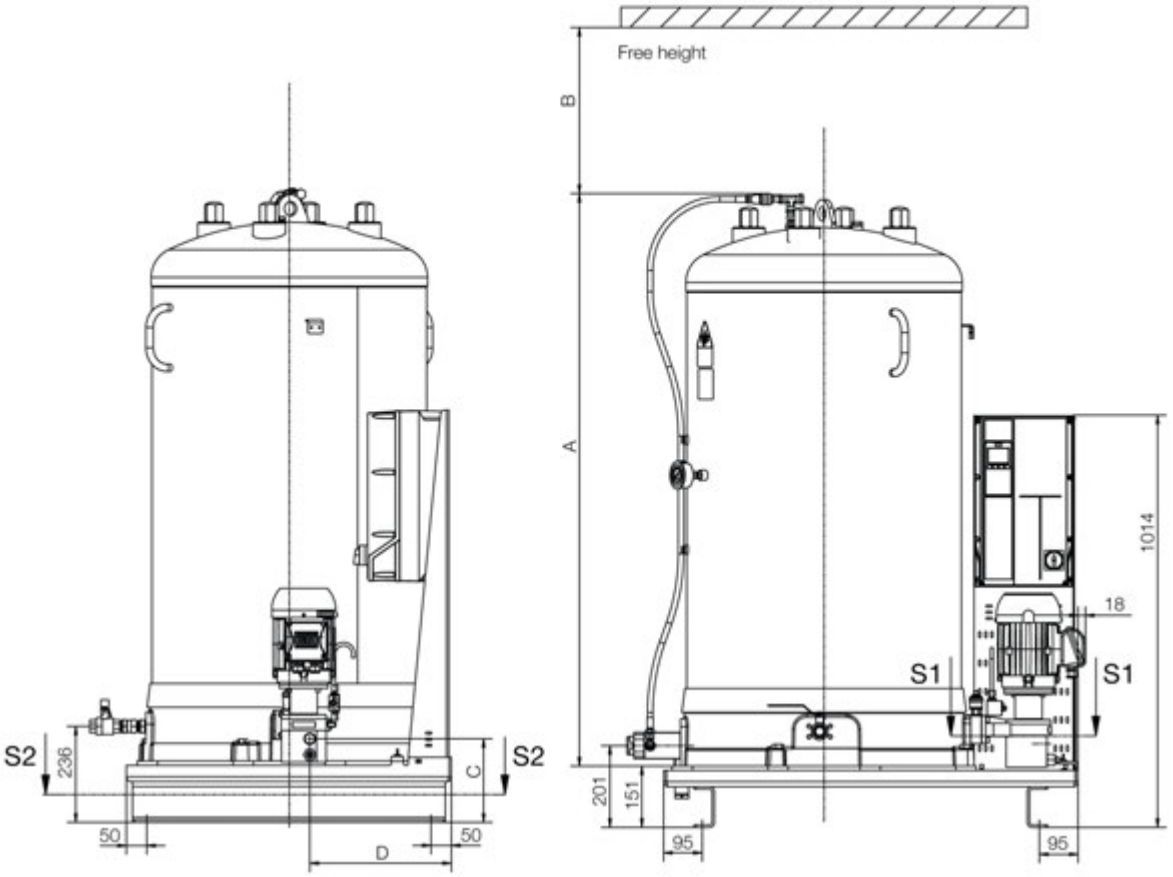

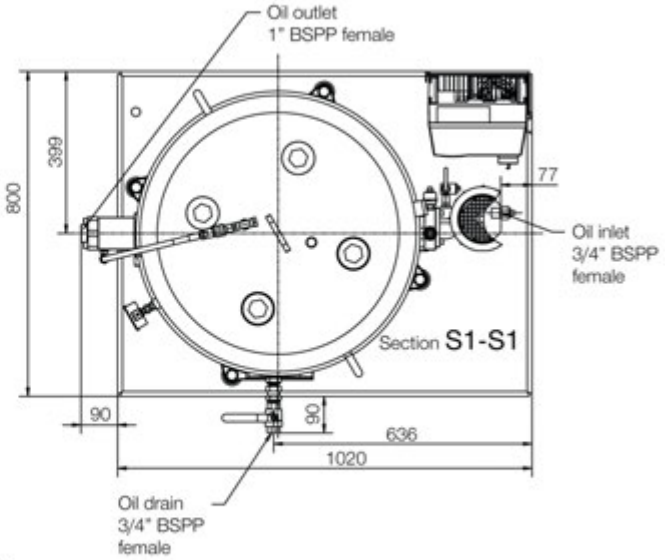

A	B	C	D
870	685	207	352
1140	950	207	352
1140	950	207	352
1410	855	207	352
1410	855	206	349
1410	855	207	352

Pipe Installation
Oil inlet: to be connected to C4 on engine.
Oil outlet: to be connected to C3 on engine.
Unit must be installed according to valid solas regulations.

2023-11-07 - en

Internal cooling water system

Internal cooling water system

The engine's cooling water system comprises a low temperature (LT) circuit and a high temperature (HT) circuit. The systems are designed only for treated fresh water.

Low temperature cooling water system

The LT cooling water system includes charge air cooling, lubricating oil cooling and alternator cooling if the latter is water-cooled. The LT system is designed for freshwater (FW) as cooling medium.

In order to prevent a too high charge air temperature, the design freshwater temperature in the LT system should not be too high. Max. 36°C is a convenient choice.

Regarding the lubricating oil cooler, the inlet temperature of the LT cooling water should not be below 10°C.

High temperature cooling water system

The high temperature cooling water is used for the cooling of cylinder liners and cylinder heads.

An engine outlet temperature of 80°C ensures a perfect combustion in the entire load area when running on Heavy Fuel Oil (HFO), i.e. this temperature limits the thermal loads in the high-load area, and hot corrosion in the combustion area is avoided.

In the low-load area, the temperature is sufficiently high to secure a perfect combustion and at the same time cold corrosion is avoided; the latter is also the reason why the engine, in stand-by position and when starting on HFO, should be preheated with a medium cooling water temperature of ≥ 60°C – either by means of cooling water from running engines or by means of a separate preheating system.

System lay-out

MAN Energy Solutions' standard for the internal cooling water system is shown on Basis Diagram 2. The system has been constructed with a view to full integration into the external system.

Temperature regulation in the HT and LT systems takes place in the external system where also pumps and fresh water heat exchangers are situated. This means that these components can be common for propulsion engine(s) and GenSets.

To be able to match every kind of external systems, the internal system can as optional be arranged with two separate circuits or as a single circuit with or without a built-on pump and a thermostatic valve in the HT-circuit, so that engine cooling can be integrated fully or partly into the external system, or can be constructed as a stand-alone unit.

Different internal basis system layouts for these applications are shown on the following pages.

2019-01-03 - en

HT-circulating pump

The circulating pump which is of the centrifugal type is mounted on the front cover of the engine and is driven by the crankshaft through a resilient gear transmission.

Technical data: *See "list of capacities" D 10 05 0 and B 13 18 1-2.*

Thermostatic valve

The termostatic valve is a fully automatic three-way valve with thermostatic elements set at fixed temperature.

Technical data: *See B 13 15 1.*

Preheating arrangement

As an optional the engine can be equipped with a built-on preheating arrangement in the HT-circuit including a thermostatic controlled el-heating element and safety valve.

The system is based on thermo-syphon circulation.

For further information *see B 13 23 1.*

2019-01-03 - en

Internal cooling water system 1

Internal cooling water system 1

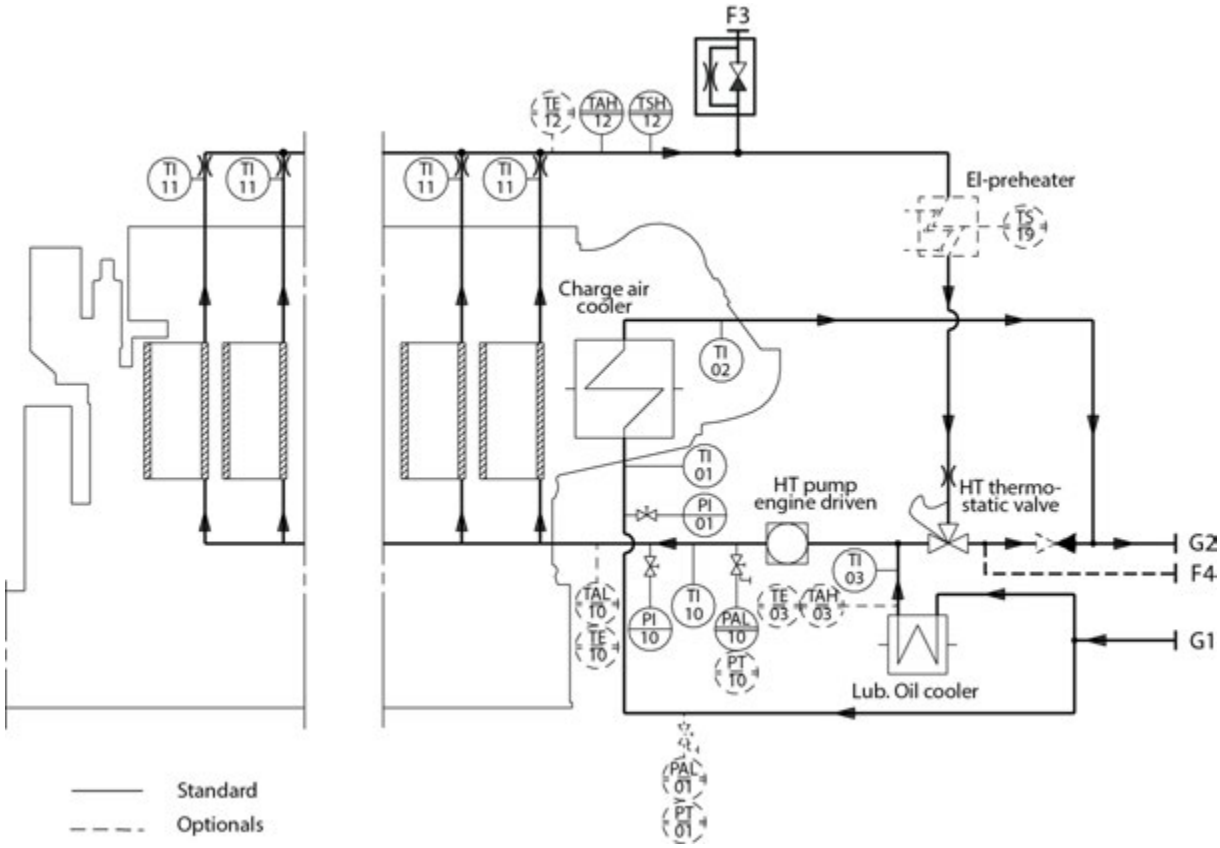

Figure 1: Diagram for internal cooling water system 1 (for guidance only, please see the plant specific engine diagram)

Pipe description

F3	Venting to expansion tank	DN 15
F4	Fresh water for preheating	DN 40
G1	LT fresh water inlet	DN 80/100
G2	LT fresh water outlet	DN 80/100

Table 1: Flange connections are standard according to DIN 2501

Description

The system is designed as a single circuit with only two flange connections to the external centralized low temperature (LT) cooling water system.

The engine is equipped with a self-controlling high temperature (HT) water circuit for cooling of cylinder liners and cylinder heads. Thus the engine on the cooling water side only requires one fresh water cooler and so the engine can

2016-03-08 - en

be intergrated in the ships cooling water system as as a stand alone unit, in a simple way, with low installation costs, which can be interesting in case of re-powering, where the engine power is increased, and the distance to the other engines is larger.

Low temperature circuit

The components for circulation and temperature regulation are placed in the external system.

The charge air coolers and the lubricating oil cooler are situated parallelly in order to have the lowest possible cooling water inlet temperature for the coolers.

The HT-circuit is cooled by adjustment of water from the LT-circuit, taken from the lubricating oil cooler outlet. Thus the amount of cooling water through the cooling system is always adjusted to the engine load.

High temperature circuit

The built-on engine driven HT-circulating pump of the centrifugal type, pumps water through a distributing pipe to bottom of the cooling water space between the liner and the frame of each cylinder unit. The water is led out through bores in the top of the frame via the cooling water guide jacket to the bore cooled cylinder head for cooling of this and the valve seats.

From the cylinder heads the water is led through a common outlet pipe to the thermostatic valve, and depending on the engine load, a smaller or larger amount of the water will be led to the external system or be re-circulated.

Optionals

Alternatively the engine can be equipped with the following:

- Engine driven pump for LT-system
- Preheater arrangement in HT-system

Branches for:

- External preheating
- Alternator cooling

If the alternator is cooled by water, the pipes for this can be integrated on the GenSet.

Data

For heat dissipation and pump capacities, see *D 10 05 0, "List of Capacities"*.

Set points and operating levels for temperature and pressure are stated in *B 19 00 0, "Operating Data and Set Points"*.

Other design data are stated in *B 13 00 0, "Design Data for the External Cooling Water System"*.

2016-03-08 - en

Internal cooling water system 2

Internal cooling water system

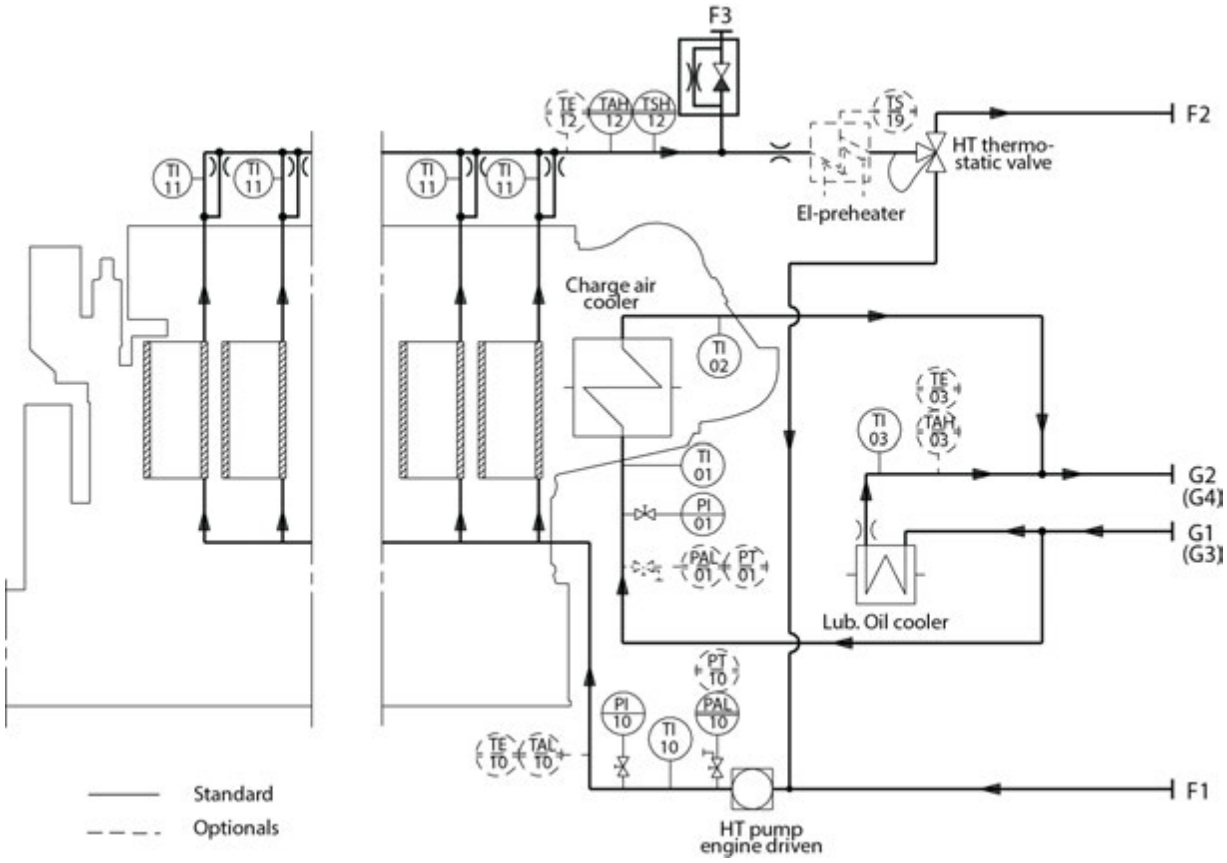

Figure 1: Diagram for internal cooling water system 2 (for guidance only, please see the plant specific engine diagram)

Pipe description

F1	HT fresh water inlet	DN 80
F2	HT fresh water outlet	DN 80
F3	Venting to expansion tank	DN 15
G1	LT fresh water inlet	DN 80/100
(G3)	LT sea water inlet	DN 80/100
G2	LT fresh water outlet	DN 80/100
(G4)	LT sea water outlet	DN 80/100

Table 1: Flange connections are standard according to DIN 2501

2016-03-08 - en

Description

The system is designed with separate LT- and HT-circuits and is fully integrated in the external system, which can be a conventional or a centralized cooling water system. With this system pumps and heat exchangers can be common for propulsion and alternator engines. It is however, recommended that the alternator engines have separate temperature regulation on the HT-circuit.

Low temperature circuit

As standard the system is prepared for fresh water in the LT-system, with pipes made of steel and the plates in the lub. oil cooler made of stainless steel.

High temperature circuit

From the external HT-system, water is led through a distributing pipe to bottom of the cooling water space between the liner and the frame of each cylinder unit. The water is led out through bores in the top of the frame via the cooling water guide jacket to the bore cooled cylinder head for cooling of this and the valve seats.

From the cylinder heads the water is led through a common outlet pipe to the external system.

Optionals

Alternatively the engine can be equipped with the following:

- Thermostatic valve on outlet, LT-system
- Engine driven pump for LT-system
- Preheater arrangement in HT-system

Branches for:

- External preheating
- Alternator cooling

If the alternator is cooled by water, the pipes for this can be integrated on the GenSet.

Data

For heat dissipation and pump capacities, see *D 10 05 0, "List of Capacities".*

Set points and operating levels for temperature and pressure are stated in *B 19 00 0, "Operating Data and Set Points".*

Other design data are stated in *B 13 00 0, "Design Data for the External Cooling Water System".*

2016-03-08 - en

Specification of engine coolant

Preliminary remarks

The composition of the engine coolant is as follows: water to dissipate the heat and a coolant additive as corrosion protection.

Engine coolant, like fuel and lubricating oil, is a medium that must be carefully selected, treated and controlled. Otherwise, corrosion, erosion and cavitation can occur on the walls of the cooling system which are in contact with water and deposits can form. Deposits impede heat transfer and can lead to thermal overload of the parts to be cooled. Treatment with a corrosion inhibitor must be carried out before the initial commissioning of the system. During subsequent operation, the concentrations prescribed by the engine manufacturer must always be observed. This applies in particular when a chemical additive is added.

Requirements

Limit values

The properties of untreated coolant must correspond to the following limit values:

Properties/Characteristic	Properties	Unit
Water type	Distillate or fresh water, free of foreign matter.	–
Total hardness	max. 10	dGH[1)]
pH value	6.5 – 8	–
Chloride ion content	max. 50	mg/l[2)]

Table 1: Properties of coolant that must be complied with

[1)] 1 dGH (German hardness) ≙ 10 mg CaO in 1 litre of water ≙ 17.8 mg $CaCO_3$/l

≙ 0.357 mval/l ≙ 0.178 mmol/l

[2)] 1 mg/l ≙ 1 ppm

Testing equipment

The manufacturers of anticorrosive agents supply user-friendly testing equipment.

Instructions on how to inspect the coolant can be found in work instruction 010.000.002-03 in the engine work instructions “010.005.000 MDC090 Maintenance instructions engine” in the folder 010_Engine system.

Additional information

Distillate

If distilled water (from a fresh water generator, for example) or fully desalinated water (from ion exchange or reverse osmosis) is available, this should ideally be used as the engine coolant. These waters are free of lime and salts, which means that deposits that could interfere with the transfer of heat to the coolant, and therefore also reduce the cooling effect, cannot form. However, these waters are more corrosive than normal hard water as the thin film of

Specification of engine coolant

2025-07-28 - de

lime scale that would otherwise provide temporary corrosion protection does not form on the walls. This is why distilled water must be handled particularly carefully and the concentration of the additive must be regularly checked.

Hardness

The total hardness of the water is the combined effect of the temporary and permanent hardness. The proportion of calcium and magnesium salts is of overriding importance. The temporary hardness is determined by the carbonate content of the calcium and magnesium salts. The permanent hardness is determined by the amount of remaining calcium and magnesium salts (sulphates). The temporary (carbonate) hardness is the critical factor that determines the extent of limescale deposit in the cooling system.

Water with a total hardness of > 10°dGH must be mixed with distilled water or softened. Subsequent hardening of extremely soft water is only necessary to prevent foaming if emulsifiable slushing oils are used.

Damage to the coolant system

Corrosion

Corrosion is an electrochemical process that can widely be avoided by selecting the correct water quality and by carefully handling the water in the engine cooling system.

Flow cavitation

Flow cavitation can occur in areas in which high flow velocities and high turbulence is present. If the steam pressure is reached, steam bubbles form and subsequently collapse in high pressure zones which causes the destruction of materials in constricted areas.

Erosion

Erosion is a mechanical process accompanied by material abrasion and the destruction of protective films by solids that have been drawn in, particularly in areas with high flow velocities or strong turbulence.

Stress corrosion cracking

Stress corrosion cracking is a failure mechanism that occurs as a result of simultaneous dynamic and corrosive stress. This may lead to cracking and rapid crack propagation in water-cooled, mechanically-loaded components if the coolant has not been treated correctly.

Treatment of engine coolant

Formation of a protective film

The purpose of treating the engine coolant using anticorrosive agents is to produce a continuous protective film on the walls of cooling surfaces and therefore prevent the damage referred to above. In order for an anticorrosive agent to be 100 % effective, it is extremely important that untreated water satisfies the requirements in the paragraph Requirements.

Protective films can be formed by treating the coolant with anticorrosive chemicals or emulsifiable slushing oil.

Treatment prior to initial commissioning of engine

Treatment with an anticorrosive agent should be carried out before the engine is brought into operation for the first time to prevent irreparable initial damage.

NOTICE

Treatment of the coolant

The engine may not be brought into operation without treating the coolant.

Specification of engine coolant

2025-07-28 - de

Additives for coolants

Only additives that have been approved by Everllence and are listed in the section Permitted coolant additives may be used.

In closed circuits only

Additives may only be used in closed circuits where no significant consumption occurs, apart from leaks or evaporation losses. Observe the applicable environmental protection regulations when disposing of coolant containing additives. For more information, consult the additive supplier.

Chemical additives

Sodium nitrite and sodium borate based additives etc. have a proven track record. Galvanised iron pipes or zinc sacrificial anodes must not be used in cooling systems. This corrosion protection is not required due to the prescribed coolant treatment and electrochemical potential reversal that may occur due to the coolant temperatures which are usual in engines nowadays. If necessary, the pipes must be deplated.

Slushing oil

The use of anti-corrosion oils in the cooling water circuit is not permitted for Everllence engines.

Anti-freeze agents

If temperatures below the freezing point of water in the engine cannot be excluded, an antifreeze agent that also prevents corrosion must be added to the cooling system or corresponding parts. Otherwise, the entire system must be heated.

Sufficient corrosion protection is achieved by adding the antifreeze additives listed under Permitted coolant additives, whereby the prescribed minimum concentration must be observed. This concentration prevents freezing at temperatures as low as -22°C and ensures adequate corrosion protection. However, the amount of antifreeze actually required always depends on the lowest temperatures to be expected at the place of use.

Antifreezes are generally based on ethylene glycol. A suitable chemical corrosion inhibitor must be added if the concentration of antifreeze prescribed by the user for a particular application is not sufficient to achieve adequate corrosion protection or if a lower concentration of antifreeze is used than would be required for adequate corrosion protection due to less stringent antifreeze requirements. As the antifreeze agents listed under Permitted coolant additives also contain corrosion inhibitors that are not generally compatible with other anti-corrosion agents, only pure glycol may be used as antifreeze in these cases.

Simultaneous use of a nitrite-free coolant additive with glycol is not permitted, as it is no longer possible to monitor the concentration of the corrosion inhibitor in such a mixture.

Antifreeze reduces the ability of the coolant to absorb heat. In some cases, the cooling effect of the coolant is not sufficient for certain operating conditions. Everllence's standard configuration is not based on the use of antifreeze. If antifreeze is to be used, consult Everllence beforehand.

The cooling system must be thoroughly cleaned before antifreeze is used.

Specification of engine coolant

2025-07-28 - de

If the coolant contains emulsifiable slushing oil, antifreeze agent may not be added as otherwise the emulsion would break up and oil sludge would form in the cooling system.

Biocides

If the use of a biocide is unavoidable because the coolant has been contaminated by bacteria, the following steps must be observed:

- It must be ensured that a biocide suitable for the specific application is used
- The biocide is compatible with the sealing materials used in the coolant system and does not corrode them
- Neither the biocide nor its degradation products contain any corrosive components. Biocides whose decomposition products contain chloride or sulphate ions are not permitted
- Biocides that cause the coolant to foam are not permitted
- Biocides should not be used constantly, but only in a pulse dose

Prerequisite for effective use of an anticorrosive agent

Clean cooling system

As contamination significantly reduces the effectiveness of the additive, the tanks, pipes, coolers and other parts outside the engine must be free of rust and other deposits before the engine is started up for the first time and after repairs of the pipe system.

The entire plant must therefore be cleaned using a suitable cleaning agent while the engine is switched off (see work instructions 010.000.001-01 and 010.000.002-04 in the engine work instructions “010.005.000 MDC090 Maintenance instructions engine” in the 010_Engine System folder).

Loose solid matter in particular must be removed by flushing the system thoroughly as otherwise erosion may occur in locations where the flow velocity is high.

The cleaning agents must not corrode the seals and materials of the cooling system. In most cases, the supplier of the coolant additive will be able to carry out this work and, if this is not possible, will at least be able to provide suitable products to do this. If this work is carried out by the engine operator, he should use the services of a specialist supplier of cleaning agents. The cooling system must be flushed thoroughly after cleaning. Once this has been done, the engine coolant must be immediately treated with anticorrosive agent. Once the engine has been brought back into operation, the cleaned system must be checked for leaks.

Regular checks of the coolant condition and system

Treated coolant can become contaminated during operation and the additive can lose some of its effectiveness. It is therefore advisable to check the cooling system and the condition of the coolant regularly. To detect leaks in the lubricating oil system, regular checking of the water in the expansion tank is recommended. Signs of oil in the water include discoloration or a visible oil film on the surface of the water sample.

Check the additive concentration using the test kits provided by the additive manufacturer at least once per week. The results must be recorded.

Specification of engine coolant

2025-07-28 - de

NOTICE

Concentration of chemical additives

The chemical additives must be added in the specified concentration. See section Permitted coolant additives.

Excessively low concentrations lead to corrosion and must be avoided. Concentrations that are somewhat higher do not cause damage. Concentrations that are more than twice as high as recommended should be avoided.

Every 2 to 6 months, a coolant sample must be sent to an independent laboratory or to the engine manufacturer for an integrated analysis.

If chemical additives or antifreeze agents are used, coolant should be replaced after 3 years at the latest.

To guarantee the safety of the crew and to obtain a representative sample, sampling must take place in accordance with valid Everllence operating instructions.

If there are high concentrations of solids (rust), the water must be completely changed and the entire system must be carefully cleaned.

Deposits in the cooling system can be caused by liquids penetrating the coolant, the emulsion breaking up, corrosion in the system, and limescale deposits due to high water hardness. An increase in the content of chloride ions is generally an indication of seawater ingress. The specified maximum of 50 mg chloride ions per kg must not be exceeded, otherwise the risk of corrosion is too high. Exhaust gases entering the coolant can lead to a sudden drop in pH or an increase in sulphate content.

Water losses must be replenished using untreated water that meets the quality standards specified in the Requirements section. The corrosion inhibitor's concentration must then be checked and corrected if necessary.

Coolant checks are particularly necessary after repairs or maintenance work during which the coolant had to be drained.

Protective measures

Anticorrosive agents contain chemical compounds that can pose a risk to health or the environment if incorrectly used. Comply with the directions in the manufacturer's material safety data sheets.

Avoid prolonged direct contact with the skin. Wash hands thoroughly after use. If larger quantities spray and/or soak into clothing, remove and wash clothing before wearing it again.

If chemicals come into contact with your eyes, rinse them immediately with plenty of water and seek medical advice.

Anticorrosive agents are generally harmful to the water cycle. Observe the relevant statutory requirements for disposal.

Auxiliary engines

If the coolant system used in a Everllence two-stroke main engine is used in a marine engine of type 16/24, 21/ 31, 23/30H, 27/38 or 28/32H, the coolant recommendations for the main engine must be observed.

Specification of engine coolant

2025-07-28 - de

Specification of engine coolant

Analysis

Everllence can carry out coolant analyses for our customers in the PrimeServLab chemical laboratory. A sample of 0.25 l is required for testing.

Permitted coolant additives

A list of currently approved coolant additives and their concentration can be found at Lubrication.

2025-07-28 - de

Coolant inspecting

Summary

Acquire and check typical values of the operating media to prevent or limit damage.

The fresh water used to fill the coolant circuits must satisfy the specifications. The coolant in the system must be checked regularly in accordance with the maintenance schedule.
The following work/steps is/are necessary:
Acquisition of typical values for the operating fluid,
evaluation of the operating fluid and checking the anticorrosive agent concentration.

Tools/equipment required

Devices for testing fresh water quality

The following can be used:

- The water test kit with all the necessary instruments and chemicals for determining water hardness, pH value and chloride content (available from Mar-Tec Marine, Hamburg).

Equipment for testing the concentration of additives

When using chemical additives:

- Testing equipment in accordance with the supplier's recommendations. Testing kits from the supplier also include equipment that can be used to determine the fresh water quality.

Testing the typical values of water

Short specification

Typical value/property	Water for filling and refilling (without additive)	Circulating water (with additive)
Water type	Fresh water, free of foreign matter	Treated coolant
Total hardness	≤ 10 dGH[1)]	≤ 10 dGH[1)]
pH value	6.5 – 8 at 20 °C	≥ 7.5 at 20 °C
Chloride ion content	≤ 50 mg/l	≤ 50 mg/l[2)]

Table 1: Quality specifications for coolants (short version)

[1)] dGH German hardness

1 dGH = 10 mg/l CaO
= 17.8 mg/l $CaCO_3$
= 0.178 mmol/L

[2)] 1 mg/l = 1 ppm

2025-06-06 - de

Testing the concentration of rust inhibitors

Short specification

Anti-corrosion agent	Concentration
Chemical additives	according to the quality specification in chapter 010.000.023-14 of the engine operating instructions "010.005.000 MDC020 Operating instructions engine" in the folder 010_Engine System
Antifreeze	according to the quality specification in chapter 010.000.023-14 of the engine operating instructions "010.005.000 MDC020 Operating instructions engine" in the folder 010_Engine System

Table 2: Concentration of coolant additives

Testing the concentration of chemical additives

The concentration should be tested every week, and/or according to the maintenance schedule, using the testing instruments, reagents and instructions of the relevant supplier.

Chemical anti-corrosion agents can only provide effective protection if the concentration is precisely maintained. In this context, the concentrations recommended by Everllence (quality regulations in chapter 010.000.023-14 of the engine operating instructions "010.005.000 MDC020 Operating instructions engine" in the folder 010_Engine System) must be observed under all circumstances. These recommended concentrations may deviate from those specified by the manufacturer.

Testing the concentration of anti-freeze agents

The concentration must be checked in accordance with the manufacturer's instructions or the test can be outsourced to a suitable laboratory. If in doubt, consult Everllence.

Regular water samplings

Small quantities of lube oil in coolant can be found by visual check during regular water sampling from the expansion tank.

Test

Regular analysis of coolant is very important for safe engine operation. We can analyse fuel for customers at Everllence laboratory PrimeServLab.

To guarantee the safety of the crew and to obtain a representative sample, sampling must take place in accordance with valid Everllence operating instructions.

2025-06-06 - de

Coolant

Coolant system cleaning

Summary

Remove contamination/residue from operating fluid systems, ensure/re-establish operating reliability.

Coolant systems containing deposits or contamination prevent effective cooling of parts. Contamination and deposits must be regularly eliminated.
This comprises the following:
Cleaning the system and, if required,
removal of limescale deposits,
flushing the system.

Cleaning

The coolant system must be checked for contamination at regular intervals. Cleaning is required if the degree of contamination is high. This work should ideally be carried out by a specialist who can provide the right cleaning agents for the type of deposits and materials in the cooling circuit. The cleaning should only be carried out by the engine operator if this cannot be done by a specialist.

Oil sludge

Oil sludge from lubricating oil that has entered the cooling system or a high concentration of anticorrosive agents can be removed by flushing the system with fresh water to which some cleaning agent has been added. Suitable cleaning agents are listed alphabetically in the table entitled Cleaning agents for removing oil sludge. Products by other manufacturers can be used providing they have similar properties. The manufacturer's instructions for use must be strictly observed.

Manufacturer	Product	Concentration	Duration of cleaning procedure/temperature
Drew	HDE - 777	4 – 5%	4 h at 50 – 60 °C
Nalfleet	MaxiClean 2	2 – 5%	4 h at 60 °C
Unitor	Aquabreak	0.05 – 0.5%	4 h at ambient temperature
Vecom	Ultrasonic Multi Cleaner	4%	12 h at 50 – 60 °C

Table 1: Cleaning agents for removing oil sludge

Lime and rust deposits

Lime and rust deposits can form if the water is especially hard or if the concentration of the anticorrosive agent is too low. A thin lime scale layer can be left on the surface as experience has shown that this protects against corrosion. However, limescale deposits with a thickness of more than 0.5 mm obstruct the transfer of heat and cause thermal overloading of the components being cooled.

Rust that has been flushed out may have an abrasive effect on other parts of the system, such as the sealing elements of the water pumps. Together with the elements that are responsible for water hardness, this forms what is known as ferrous sludge which tends to gather in areas where the flow velocity is low.

Coolant system

2016-09-08 - de

Products that remove limescale deposits are generally suitable for removing rust. Suitable cleaning agents are listed alphabetically in the table entitled Cleaning agents for removing limescale and rust deposits. Products by other manufacturers can be used providing they have similar properties. The manufacturer's instructions for use must be strictly observed. Prior to cleaning, check whether the cleaning agent is suitable for the materials to be cleaned. The products listed in the table entitled Cleaning agents for removing limescale and rust deposits are also suitable for stainless steel.

Manufacturer	Product	Concentration	Duration of cleaning procedure/temperature
Drew	SAF-Acid Descale-IT Ferroclean	5 – 10 % 5 – 10 % 10 %	4 h at 60 – 70 °C 4 h at 60 – 70 °C 4 – 24 h at 60 – 70 °C
Nalfleet	Nalfleet 9 - 068	5 %	4 h at 60 – 75 °C
Unitor	Descalex	5 – 10 %	4 – 6 h at approx. 60 °C
Vecom	Descalant F	3 – 10 %	ca. 4 h at 50 – 60 °C

Table 2: Cleaning agents for removing lime scale and rust deposits

In emergencies only

Hydrochloric acid diluted in water or aminosulphonic acid may only be used in exceptional cases if a special cleaning agent that removes limescale deposits without causing problems is not available. Observe the following during application:

- Stainless steel heat exchangers must never be treated using diluted hydrochloric acid.
- Cooling systems containing non-ferrous metals (aluminium, red bronze, brass, etc.) must be treated with deactivated aminosulphonic acid. This acid should be added to water in a concentration of 3 – 5 %. The temperature of the solution should be 40 – 50 °C.
- Diluted hydrochloric acid may only be used to clean steel pipes. If hydrochloric acid is used as the cleaning agent, there is always a danger that acid will remain in the system, even when the system has been neutralised and flushed. This residual acid promotes pitting. We therefore recommend you have the cleaning carried out by a specialist.

The carbon dioxide bubbles that form when limescale deposits are dissolved can prevent the cleaning agent from reaching boiler scale. It is therefore absolutely necessary to circulate the water with the cleaning agent to flush away the gas bubbles and allow them to escape. The length of the cleaning process depends on the thickness and composition of the deposits. Values are provided for orientation in the table entitled Cleaning agents for removing limescale and rust deposits.

Following cleaning

The cooling system must be flushed several times once it has been cleaned using cleaning agents. Replace the water during this process. If acids are used to carry out the cleaning, neutralise the cooling system afterwards with suitable chemicals then flush. The system can then be refilled with water that has been prepared accordingly.

Coolant system

2016-09-08 - de

NOTICE

Only carry out cleaning procedure with cooled engine

Only begin the cleaning procedure when the engine has cooled down. Hot engine parts may not come into contact with cold water. After re-filling the cooling system, open the venting pipes. Blocked venting pipes prevent the air from escaping and may cause thermal overload of the engine.

⚠ WARNING

Danger of chemical burns

From cleaning agents poisonous gases and fumes can develop, which may cause light to severe person injuries.

- Wear protective clothing
- Provide adequate ventilation
- Do not inhale developed gases and fumes
- Observe Safety Data Sheets or Operating Instructions of the relevant manufacturer

The applicable instructions for disposing of cleaning agents or acids are to be observed.

2016-09-08 - de

Coolant system

Coolant system

This page is intentionally left blank

2016-09-08 - de

One string central cooling water system

One string central cooling water system

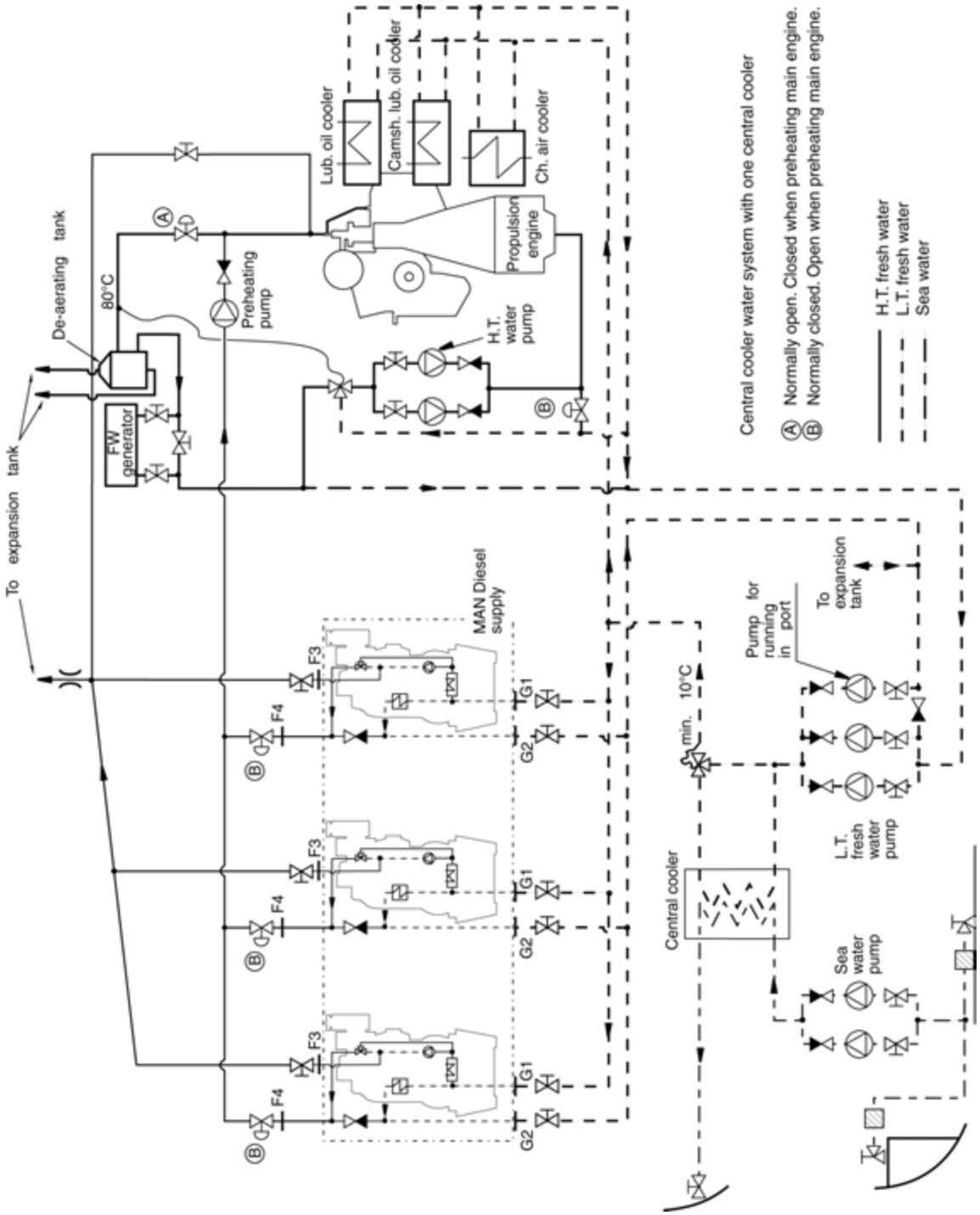

Figure 1: Diagram for one string central cooling water system.

2016-01-05 - en

System design

The system is a central cooling water system of simple design with only one central cooler. Low temperature (LT) and fresh water (FW) pumps are common for all engines. In order to minimize the power consumption the LT FW pump installation consists of 3 pumps, two for sea operation and smaller one for harbour operation.

The GenSet engines are connected as a one string plant, with only one inlet- and outlet cooling water connection and with internal HT-circuit, see also B 13 00 0 “Internal cooling water system 1”, describing this system.

The propulsion engines' HT-circuit is built up acc. to the same principle, i.e. HT-water temperature is adjusted with LT-water mixing by means of the thermostatic valve.

The system is also remarkable for its preheating of stand-by GenSet engines and propulsion engine by running GenSets, without extra pumps and heaters.

Preheating of stand-by GenSets during sea operation

GenSets in stand-by position are preheated automatically via the venting pipe with water from the running engines. This is possible due to the pressure difference, which the running GenSet engines HT-pumps produce.

Preheating of stand-by GenSets and propulsion engine during harbour operation

During harbour stay the propulsion and GenSet engines are also preheated in stand-by position by the running GenSets. Valve (B) is open and valve (A) is closed. Thus the propulsion engine is heated from top and downwards, which is the most economic solution.

2016-01-05 - en

Central cooling system

Central cooling system

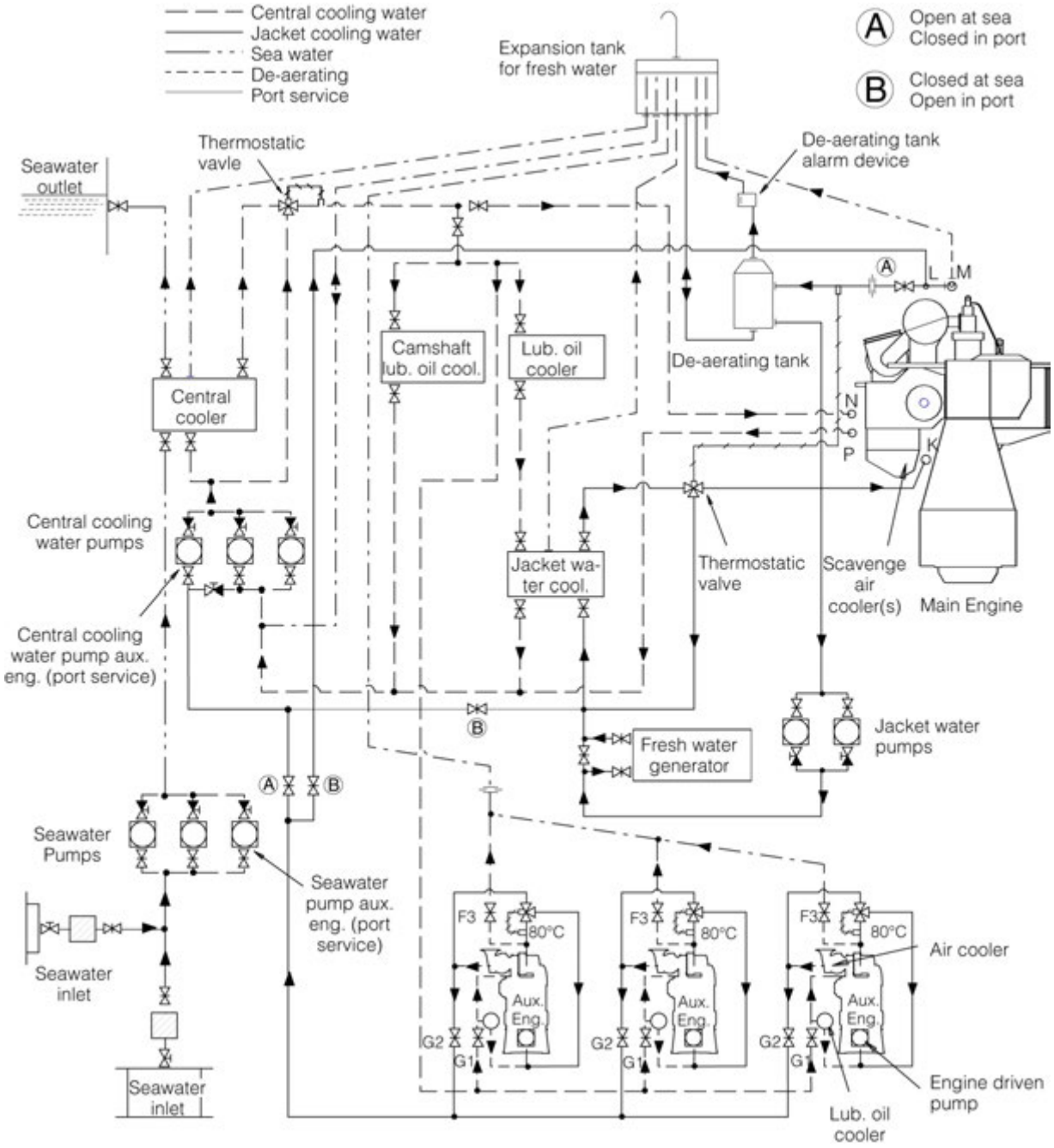

Figure 1: Diagram for central cooling system.

Design features and working principle

This diagram describes the possibilities with regard to the design of a common auxiliary system for a two-stroke main engine of the MC-type and four-stroke GenSets fromMAN Energy Solutions.

The central cooling system is an alternative to the conventional seawater cooling system, based on the same design principles with regard to cooler locations, flow control and preheating, but with a central cooler and one additional set of pumps. The central cooler minimizes maintenance work by being the only component that is in contact with seawater. In all other parts of the system, inhibited fresh water is used in accordance with MAN Energy Solutions' specifications.

Operation at sea

The seawater cooling pumps, item 1, pump seawater from the sea chests through the central cooler, item 2, and overboard. Alternatively, some shipyards use a pumpless scoop system. On the freshwater side, the central cooling water pumps, item 3, circulate the low-temperature fresh water, in a cooling circuit, directly through the lubricating oil coolers, item 4, of the main engine, the auxiliary engines and the air coolers, item 5.

The jacket water cooling system for the auxiliary engines is equipped with engine-driven pumps and a by-pass system integrated in the low-temperature system, whereas the main engine jacket system has an independent pump circuit with jacket water pumps, item 6, circulating the cooling water through the fresh water generator, item 7, and the jacket water cooler, item 8, to the inlet of the engine.

A thermostatically controlled 3-way valve, item 9, at the jacket cooler outlet mixes cooled and uncooled water to maintain an outlet water temperature of 80-82°C from the main engine.

As all fresh cooling water is inhibited and common for the central cooling system, only one common expansion tank, item 10, is necessary, for de-aeration of both the low and high temperature cooling systems. This tank accommodates the difference in the water volume caused by changes in the temperature.

To prevent the accumulation of air in the cooling water system, a de-aeration tank, item 11, is located below the expansion tank. An alarm device is inserted between the de-aeration tank and the expansion tank so that the operating crew can be notified if excess air or gas is released, as this signals a malfunction of engine components.

Operation in port

During operation in port, when the main engine is stopped but one or more auxiliary engines are running, the valve, item A, is closed and the valve, item B, is open. A small central water pump, item 3, will circulate the necessary flow of water for the air cooler, the lubricating oil cooler, and the jacket cooler of the auxiliary engines. The auxiliary engine-driven pumps and the integrated loop mentioned above ensure a satisfactory jacket cooling water temperature at the auxiliary engine outlet.

The main engine is preheated as described for the jacket water system, fig. 1.

2019-01-03 - en

Jacket water cooling system

Jacket water cooling system

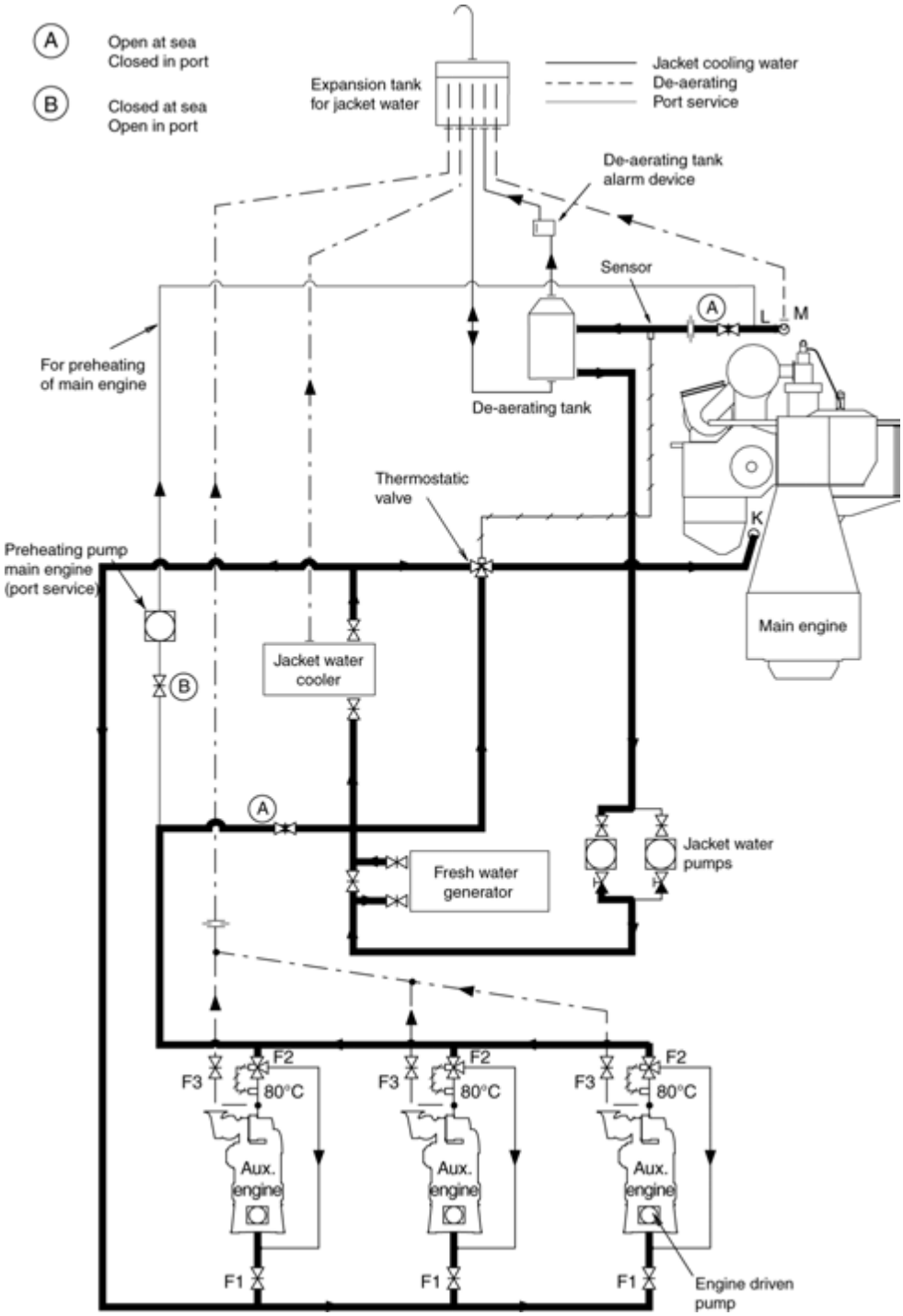

Figure 1: Operating at sea.

2019-02-20 - en

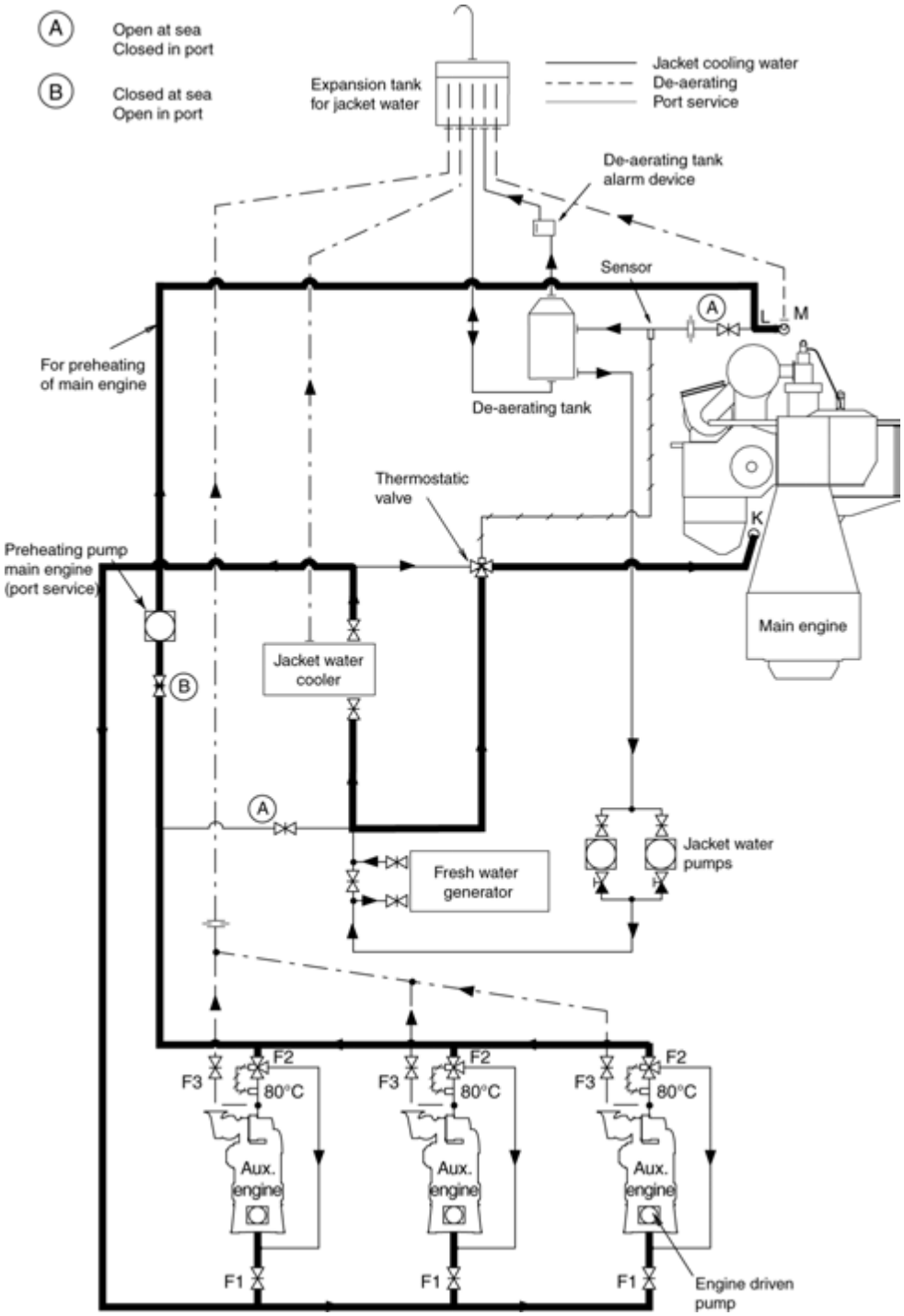

Figure 2: Operating in port.

2019-02-20 - en

Design features and working principle

This diagram describes the possibilities with regard to the design of a common auxiliary system for a two-stroke main engine of the MC-type and four-stroke GenSets from MAN Energy Solutions.

The jacket water cooling system controls the temperature of the engines proper.

The jacket water is to be inhibited to protect the surfaces of the cooling system against corrosion, corrosion fatigue, cavitation and the formation of scale.

Operation at sea

The jacket water pumps circulate hot cooling water from the engines to the fresh water generator and from there to the jacket water cooler. Here a thermostatically controlled 3-way valve mixes cooled and uncooled water to maintain an outlet temperature of 80-82°C from the main engine.

An integrated loop in the auxiliary engines ensures a constant temperature of 80°C at the outlet of the auxiliary engines.

There is one common expansion tank for the main engine and the auxiliary engines.

To prevent the accumulation of air in the jacket water system, a de-aeration tank is located at the outlet of the main engine. An alarm device is inserted between the de-aeration tank and the expansion tank so that the operating crew can be notified if excess air or gas is released, as this signals a malfunction of engine components.

Operation in port

The main engine is preheated by utilizing hot water from the auxiliary engine(s). Depending on the size of main engine and auxiliary engines, an extra preheater may be necessary. This preheating is activated by closing valve A and opening valve B.

Activating valves A and B will change the direction of flow, and the water will now be circulated by the auxiliary engine-driven pumps. From the auxiliary engines, the water flows directly to the main engine jacket outlet. When the water leaves the main engine, through the jacket inlet, it flows to the thermostatically controlled 3-way valve.

As the temperature sensor for the valve in this operating mode is measuring in a non-flow, low temperature piping, the valve will lead most of the cooling water to the jacket water cooler.

The integrated loop in the auxiliary engines will ensure a constant temperature of 80°C at the auxiliary engine outlet, the main engine will be preheated, and auxiliary engines in stand-by can also be preheated by operating valves F3 and F1.

2019-02-20 - en

This page is intentionally left blank

2019-02-20 - en

Expansion tank

General

To provide for changes in volume in the closed jacket water cooling system caused by changes in temperature or leakage, an expansion tank must be installed.

As the expansion tank also should provide a certain suction head for the fresh water pump to prevent cavitation, the lowest water level in the tank should be minimum 8-10 m above the centerline of the crankshaft.

The venting pipe must be connected to the expansion tank below the minimum water level; this prevents oxydation of the cooling water caused by "splashing" from the venting pipe. The expansion tank should be equipped with venting pipe and flange for filling of water and inhibitors.

Volume

Engine type	Cyl. qty.	Expansion volume litre*	Recommended tank volume m^3**
L23/30	5 cyl. engine	11	0.1
	6 cyl. engine	13	0.1
	7 cyl. engine	15	0.1
	8 cyl engine	17	0.1
	9 cyl engine	-	-
L28/32	5 cyl. engine	28	0.15
	6 cyl. engine	33	0.15
	7 cyl. engine	39	0.15
	8 cyl engine	44	0.15
	9 cyl engine	50	0.15
V28/32	12 cyl. engine	66	0.3
	16 cyl. engine	88	0.3
	18 cyl. engine	99	0.3
L16/24	5 cyl. engine	4	0.1
	6 cyl. engine	5	0.1
	7 cyl. engine	5	0.1
	8 cyl engine	5	0.1
	9 cyl engine	6	0.1
L21/31	5 cyl. engine	6	0.1
	6 cyl. engine	7	0.1
	7 cyl. engine	8	0.1
	8 cyl engine	9	0.1
	9 cyl engine	10	0.1
L27/38	5 cyl. engine	10	0.15
	6 cyl. engine	12	0.15
	7 cyl. engine	13	0.15
	8 cyl engine	15	0.15
	9 cyl engine	20	0.15

2023-09-14 - en

Engine type	Cyl. qty.	Expansion volume litre*	Recommended tank volume m^3**
* Per engine ** Common expansion tank			

Table 1: Expansion volume for cooling water system and recommended volume of expansion tank.

2023-09-14 - en

Preheater arrangement in high temperature system

General

The built-on cooling water preheating arrangement consist of a thermostat-controlled el-preheating element built into the outlet pipe for the HT cooling water on the engine's front end. The pipe dimension has been increased in the piping section where the heating element is mounted.

Cyl. No.	Preheater 3x400V/3x440V kW
5	1 x 7.5
6	1 x 9.0
7	1 x 9.0
8	1 x 12.0

The system is based on thermo-syphon cooling and reverse water direction, i.e. from top and downward, and an optimal heat distribution in the engine is thus reached.

When the engine is in standstill, an extern valve must shut off the cooling water inlet.

Operation

Engines starting on HFO and engines in stand-by position must be preheated. It is therefore rcommended that the preheater is arranged for automatic operation, so that the preheater is disconnected when the engine is running and connected when the engine is in stand-by position. The thermostat setpoint is adjusted to 70°C, that gives a temperature of app. 50°C at the top cover. *See also E 19 13 0, High Temperature Preheater Control Box.*

2016-01-05 - en

This page is intentionally left blank

2016-01-05 - en

Expansion tank pressurized

Description

Engine type	Cyl. qty.	Expansion volume litre*	Recommended tank volume m^3**
L23/30	5 cyl. engine	11	0.1
	6 cyl. engine	13	0.1
	7 cyl. engine	15	0.1
	8 cyl engine	17	0.1
	9 cyl engine	-	-
L28/32	5 cyl. engine	28	0.15
	6 cyl. engine	33	0.15
	7 cyl. engine	39	0.15
	8 cyl engine	44	0.15
	9 cyl engine	50	0.15
V28/32	12 cyl. engine	66	0.3
	16 cyl. engine	88	0.3
	18 cyl. engine	99	0.3
L16/24	5 cyl. engine	4	0.1
	6 cyl. engine	5	0.1
	7 cyl. engine	5	0.1
	8 cyl engine	5	0.1
	9 cyl engine	6	0.1
L21/31	5 cyl. engine	6	0.1
	6 cyl. engine	7	0.1
	7 cyl. engine	8	0.1
	8 cyl engine	9	0.1
	9 cyl engine	10	0.1
L27/38	5 cyl. engine	10	0.15
	6 cyl. engine	12	0.15
	7 cyl. engine	13	0.15
	8 cyl engine	15	0.15
	9 cyl engine	20	0.15

* Per engine
** Common expansion tank

Table 1: Expansion volume for cooling water system and recommended volume of expansion tank.

2023-09-14 - en

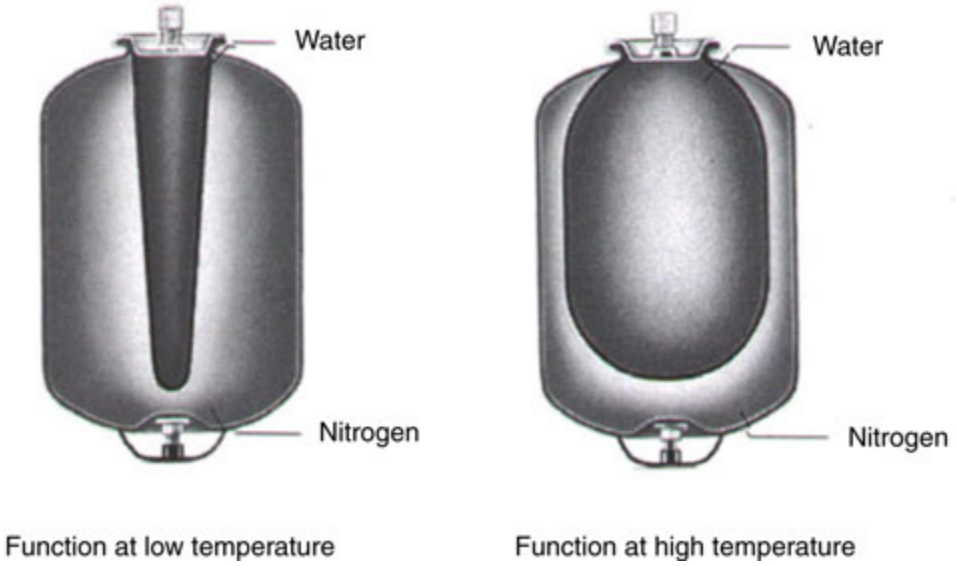

Figure 1: Function of expansion tank.

- Water connection in the top ensures easy and simple installation and control under operation.
- Cooling water is absorbed in a rubber bag which is hanging in the all-welded vessel.
- Corrosion of the all-welded vessel is excluded.
- The rubber bag is replaceable.

The expansion vessel should be connected to the system at a point close to the cooling water inlet connections (G1 / F1) in order to maintain positive pressures throughout the system and allow expansion of the water.

The safety valves are fitted on the manifold.

The pressure gauge is fitted on the manifold in such a position that it can be easily read from the filling point.

The filling point should be near the pressure expansion vessel. Particularly the pressure gauge in such a position that the pressure gauge can be easily read from the filling point, when filling from the mains water.

Automatic air venting valve should be fitted at the highest point in the cooling water system.

2023-09-14 - en

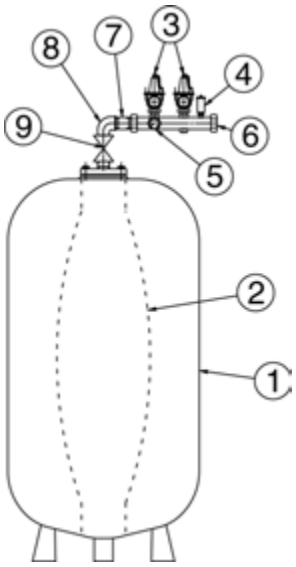

1 Pressure vessel
2 Exchangeable rubber bag
3 Safety valves
4 Automatic air venting valve
5 Pressure gauge
6 Manifold
7 Threaded pipe
8 Elbow
9 Shutt-off valve

Figure 2: Expansion tank

2023-09-14 - en

This page is intentionally left blank

2023-09-14 - en

Compressed air system

Compressed air system

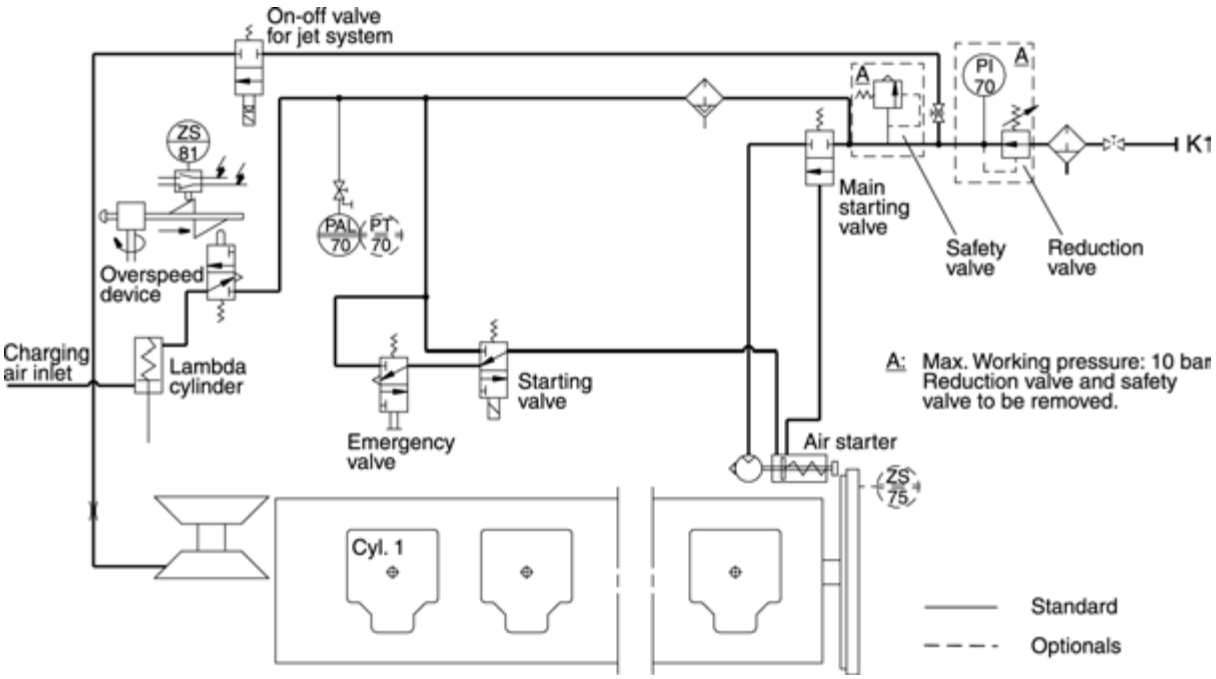

Figure 1: Diagram for compressed air system (for guidance only, please see the plant specific engine diagram)

Air supply!

WARNING Air supply must not be interrupted when engine is running

Pipe description

Pipe description		
K1	Compressed air inlet	DN 40

Table 1: Flange connections are standard according to DIN 2501

General

The compressed air system on the engine contains a starting system, starting control system and safety system. Further, the system supplies air to the jet assist system.

The compressed air is supplied from the starting air receivers (30 bar) through a reduction station, from where compressed air at 7-9 bar is supplied to the engine.

2020-05-26 - en

To avoid dirt particles in the internal system, a strainer is mounted in the inlet line to the engine.

Starting system

The engine is started by means of a built-on air starter, which is a turbine motor with gear box, safety clutch and drive shaft with pinion. Further, there is a main starting valve.

Control system

The air starter is activated electrically with a pneumatic 3/2 way solenoid valve. The valve can be activated manually from the starting box on the engine, and it can be arranged for remote control, manual or automatic.

For remote activation, the starting spool is connected so that every starting signal to the starting spool goes through the safe start function, which is connected to the converter for engine rpm.

Further, the system is equipped with an emergency starting valve which makes it possible to activate the air starter manually in case of a power failure.

Safety system

Air supply must not be interrupted when the engine is running.

As standard the engine is equipped with a pneumatic/mechanical overspeed device, which starts to operate if the maximum permissible rpm is exceeded. This device is fitted to the end cover of the engine driven lubricating pump and is driven from the pump through a resilient coupling.

When the maximum permissible rpm is exceeded, the overspeed device will activate a pneumatically controlled stop cylinder, which will bring the fuel index to zero and stop the engine.

Pneumatic start sequence

When the starting valve is opened, air will be supplied to the drive shaft housing of the air starter.

The air supply will - by activating a piston - bring the drive pinion into engagement with the gear rim on the engine flywheel.

When the pinion is fully engaged, the pilot air will flow to, and open the main starting valve, whereby air will be led to the air starter, which will start to turn the engine.

When the rpm exceeds approx. 140, at which firing has taken place, the starting valve is closed whereby the air starter is disengaged.

Optionals

Besides the standard components, the following standard optionals can be built-on:

- Main stop valve, inlet engine

Pressure transmitting:

- PT 70 Compressed air inlet

2020-05-26 - en

Position switching, stop:

- ZS75 Microswitch on flywheel

Data

For air consumption pr. start, *see D 10 05 0 "List of Capacities".*

Operating levels and set points, *see B 19 00 0, "Operating Data and Set Points".*

2020-05-26 - en

This page is intentionally left blank

2020-05-26 - en

Compressed air system

Diagram

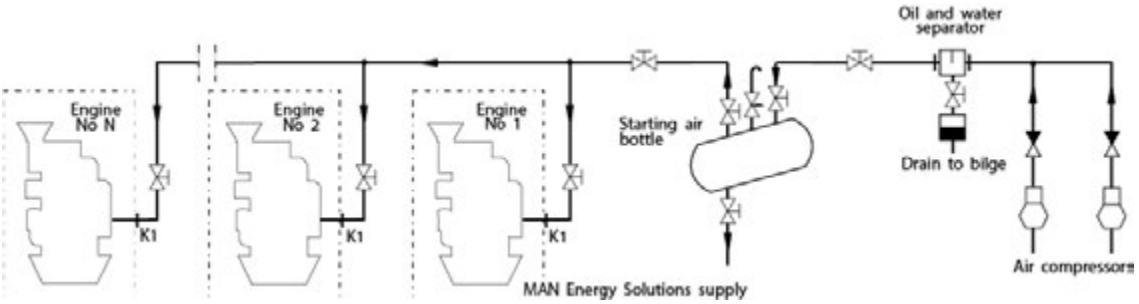

Figure 1: Diagram for compressed air system

Design of external system

The external compressed air system should be common for both propulsion engines and GenSet engines.

Separate tanks shall only be installed in turbine vessels, or if GenSets in engined vessels are installed far away from the propulsion plant.

The design of the air system for the plant in question should be according to the rules of the relevant classification society.

As regards the engine's internal compressed air system, please *see B 14 00 0 "Internal Compressed Air System".*

An oil and water separator should be mounted between the compressor and the air receivers, and the separator should be equipped with automatic drain facilities.

Each engine needs only one connection for compressed air, please *see diagram for the compressed air system.*

Installation

In order to protect the engine's starting and control equipment against condensation water, the following should be observed:

- The air receiver(s) should always be installed with good drainage facilities. Receiver(s) arranged in horizontal position must be installed with a slope downwards of min. 3°-5°.
- Pipes and components should always be treated with rust inhibitors.
- The starting air pipes should be mounted with a slope towards the receivers, preventing possible condensed water from running into the compressors.
- Drain valves should be mounted at the lowest position on the starting air pipes.

2024-08-20 - en

This page is intentionally left blank

2024-08-20 - en

Specification of compressed air

General

For compressed air quality observe the ISO 8573-1. Compressed air must be free of solid particles and oil (acc. to the specification).

Requirements

Compressed air quality of starting air system

The starting air must fulfil at least the following quality requirements according to ISO 8573-1.

Purity regarding solid particles	Quality class 6
Particle size > 40µm	max. concentration < 5 mg/m^3
Purity regarding moisture	Quality class 7
Residual water content	< 0.5 g/m^3
Purity regarding oil	Quality class X

Additional requirements are:

- The air must not contain organic or inorganic silicon compounds.
- The layout of the starting air system must ensure that no corrosion may occur.
- The starting air system and the starting air receiver must be equipped with condensate drain devices.
- By means of devices provided in the starting air system and via maintenance of the system components, it must be ensured that any hazardous formation of an explosive compressed air/lube oil mixture is prevented in a safe manner.

Compressed air quality in the control air system

Please note that control air will be used for the activation of some safety functions on the engine – therefore, the compressed air quality in this system is very important.

Control air must meet at least the following quality requirements according to ISO 8573-1.

- Purity regarding solid particles — Quality class 5
- Purity regarding moisture — Quality class 4
- Purity regarding oil — Quality class 3

For catalysts

The following specifications are valid unless otherwise defined by any other relevant sources:

Compressed air quality for soot blowing

Compressed air for soot blowing must meet at least the following quality requirements according to ISO 8573-1.

- Purity regarding solid particles — Quality class 3
- Purity regarding moisture — Quality class 4
- Purity regarding oil — Quality class 2

Compressed air quality for reducing agent atomisation

Compressed air for atomisation of the reducing agent must fulfil at least the following quality requirements according to ISO 8573-1.

Specification of compressed air

2020-02-26 - de

- Purity regarding solid particles — Quality class 3
- Purity regarding moisture — Quality class 4
- Purity regarding oil — Quality class 2

NOTICE

Clogging of catalysts

To prevent clogging of catalysts and catalyst lifetime shortening, the compressed air specification must always be observed.

For gas valve unit control (GVU)

Compressed control air quality for the gas valve unit control (GVU)

Compressed air for the gas valve unit control (GVU) must meet at least the following quality requirements according to ISO 8573-1.

- Purity regarding solid particles — Quality class 2
- Purity regarding moisture — Quality class 3
- Purity regarding oil — Quality class 2

Specification of compressed air

2020-02-26 - de

Starting air system

Design features and working principle

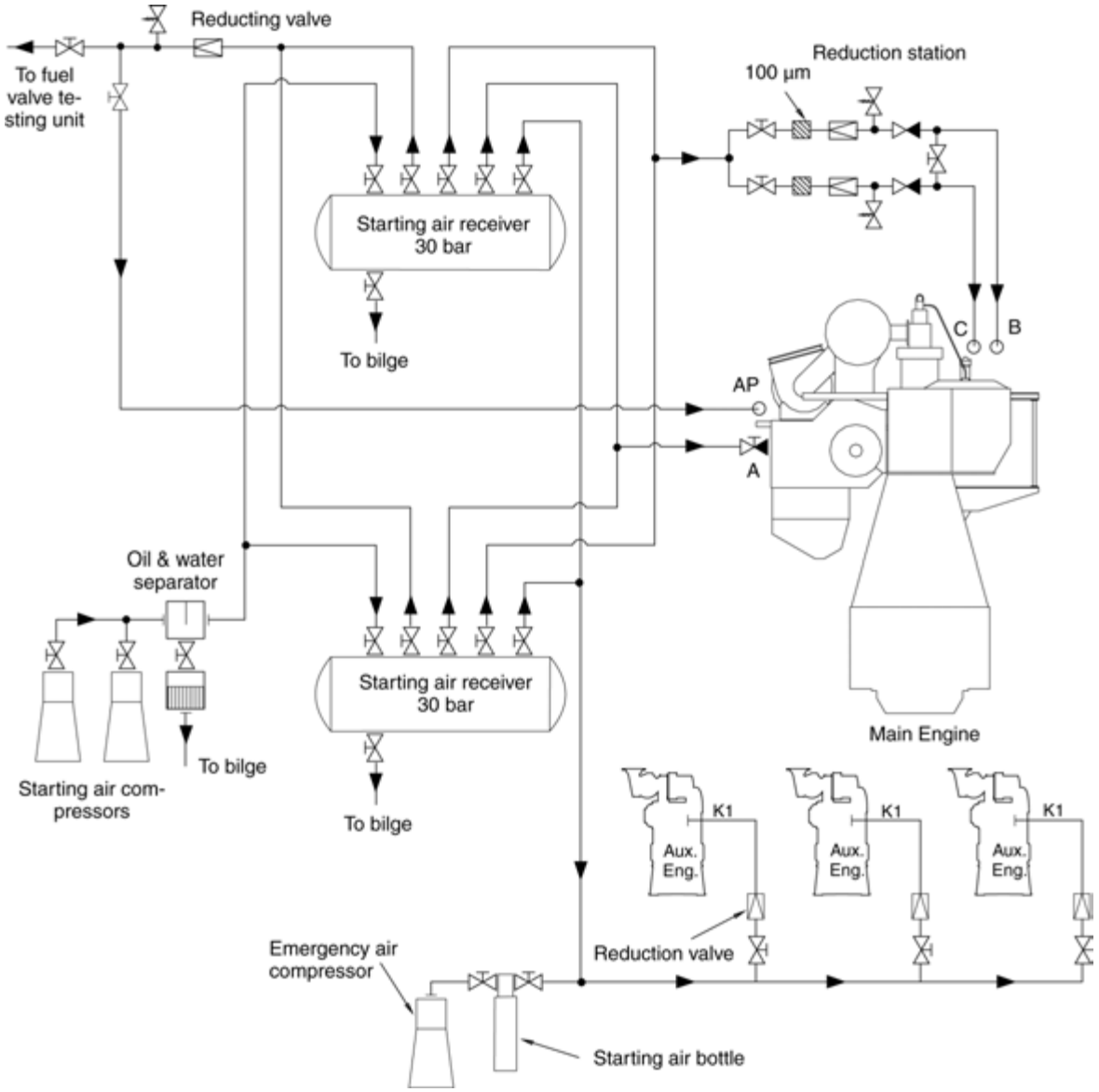

Figure 1: Starting air system

This diagram describes the possibilities with regard to the design of a common auxiliary system for a two-stroke main engine of the MC-type and four-stroke GenSets from MAN Energy Solutions.

Two starting air compressors with automatic start and stop maintain a starting air pressure of 30 bar in the starting air receivers.

The main engine is supplied with 30 bar starting air directly from the starting air receivers. Through a pressure reduction station compressed air at 7 bar is supplied as control air for the engine manoeuvring system, and as safety air for the emergency system.

2019-01-03 - en

Starting air and control air for the auxiliary engine(s) is also supplied from the same starting air receivers, via reduction valves that lower the pressure to a value suited to the actual type of MAN Energy Solutions four-stroke auxiliary engines chosen. An emergency air compressor and a starting air bottle are installed for redundant emergency start of the auxiliary engines.

If high-humidity air is taken in by the air compressors, an oil and water separator will remove moisture drops present in the 30 bar compressed air. When the pressure is subsequently reduced to 7 bar, as for the main engine manoeuvring system, the humidity in the compressed air will be very slight. Consequently, further air drying is considered unnecessary.

From the starting air receivers a special air line leads to the valve testing equipment.

2019-01-03 - en

Combustion air system

General

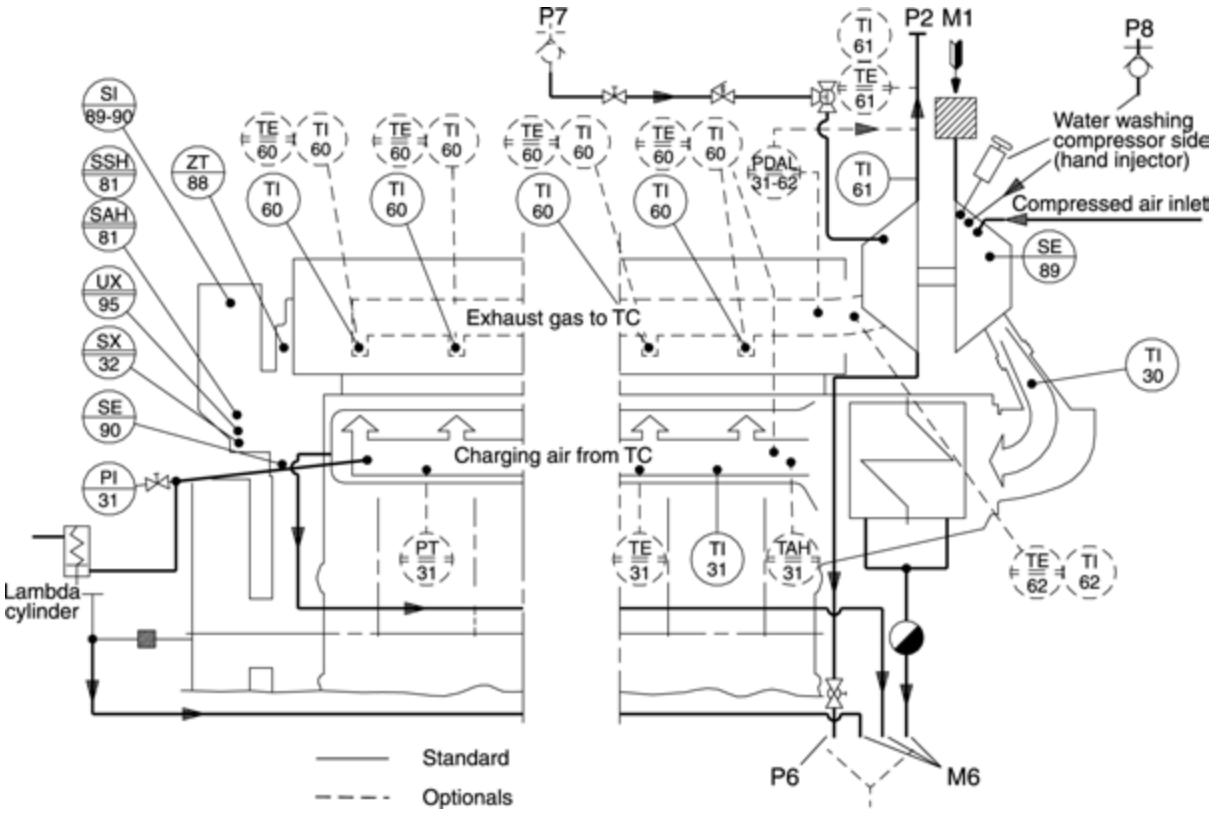

Figure 1: Diagram for combustion air system.

Pipe description		
M1	Charge ir inlet	
M6	Drain from charge air cooler outlet	DN 15*
P2	Exhaust gas outlet	**
P6	Drain from turbocharger outlet	DN 15*
P7	Water washing turbine side inlet (Optional quick coupling)	1/2"
P8	Water washing, compressor side with quick coupling inlet	1/4"

Table 1: *Flange connections are standard according to DIN 2501. **See B 16 01 0 "Exhaust Gas System" and B 16 02 0 "Position of gas outlet on turbocharger".

The air intake to the turbochargers takes place direct from the engine room through the intake silencer on the turbocharger.

From the turbocharger the air is led via the charge air cooler and charge air receiver to the inlet valves of each cylinder.

2018-12-21 - en

The charge air cooler is a compact tube-type cooler with a large cooling surface.

The charge air receiver is integrated in the engine frame on the exhaust side.

It is recommended to blow ventilation air in the level of the top of the engine(s) close to the air inlet of the turbocharger, but not so close that sea water or vapour may be drawn in. It is further recommended that there always is a positive air pressure in the engine room.

Water mist catcher

At outlet charge air cooler the charge air is led through the water mist catcher. The water mist catcher prevents condensed water (one of the major causes of cylinder wear) from entering the combustion chamber.

Turbocharger

The engine is as standard equipped with a high-effeciency MAN Energy Solutions NR/R turbocharger of the radial type, which is located on the front end of the engine, mounted on the top plate of the charging air cooler housing.

Cleaning of Turbocharger

The turbocharger is fitted with an arrangement for water washing of the turbine side, *see B 16 01 1,* and water washing of the compressor side, *see B 15 05 1.* Soft blast cleaning on the turbine side can be fitted as optional, *see B 16 01 2.*

Lambda controller

The purpose of the lambda controller is to prevent injection of more fuel in the combustion chamber than can be burned during a momentary load in-crease. This is carried out by controlling the relation between the fuel index and the charge air pressure. The lambda controller has the following advantages:

- Reduction of visible smoke in case of sudden momentary load increases.
- Improved load ability.
- Less fouling of the engine's exhaust gas ways.
- Limitation of fuel oil index during starting procedure.

The above states that the working conditions are improved under difficult circumstances and that the maintenance costs for an engine, working with many and major load changes, will be reduced.

Optionals

Besides the standard components, the following standard optionals can be built-on:

Pressure alarm low

- PAL 35 Charge air, surplus air inlet

Pressure differential alarm low

- PDAL 31-62, charge air and exhaust gas

Pressure transmitting

2018-12-21 - en

- PT 31 Charge air, outlet from cooler

Temperature alarm high

- TAH 31 Charge air, outlet from cooler

Temperature element

- TE 31 Charge air, outlet from cooler
- TE 60 Exhaust gas, outlet cylinder
- TE 61 Exhaust gas, outlet turbocharger
- TE 62 Exhaust gas, inlet turbocharger

Temperature indicating

- TI 60 Exhaust gas, outlet cylinder
- TI 61 Exhaust gas, outlet turbocharger
- TI 62 Exhaust gas, inlet turbocharger

Data

For charge air heat dissipation and exhaust gas data, *see D 10 05 0 "List of Capacities".*

Set points and operating levels for temperature and pressure are stated in *B 19 00 0 "Operating Data and Set Points".*

2018-12-21 - en

This page is intentionally left blank

2018-12-21 - en

Condensate amount

Basic principles

Air contains water in extremely fine distribution - as water vapor. During compression and cooling of air some of this water will separate from the air. This applies to the compression and cooling of the charge air by the turbocharger and charge air cooler and it applies to the behavior of compressed air in pressure vessels. The condensate volume increases

- with increasing air temperature,
- with increasing air humidity,
- as the charge air pressure increases and
- as the charge air temperature falls.

After the charge air cooler, i.e. in the charge air pipe, 1.000 kg of water per hour may be produced under certain circumstances. This is due to the great volumes of air and the relatively high charge air pressures. At tropical temperatures the effect is even greater.

Therefore it is important, that condensate drain always operates properly to minimize the condensed water quantity in the engine.

The amount of water produced in compressed air pressure vessels is much less. For pressure vessels with 4 m^3 volume this amount hardly ever exceeds 5 kg per charge.

NOTICE Condensate drain must always operate properly. Compressed air pressure vessels must be drained after they are filled and before use.

Nomogram for calculating the condensed water quantity

By means of the nomogram in figure 1 the water quantity which arises during the compressing and cooling of air in the charge air pipe or in a pressure vessel can be determined. The principles of the procedure are described using two examples.

2024-05-29 - en

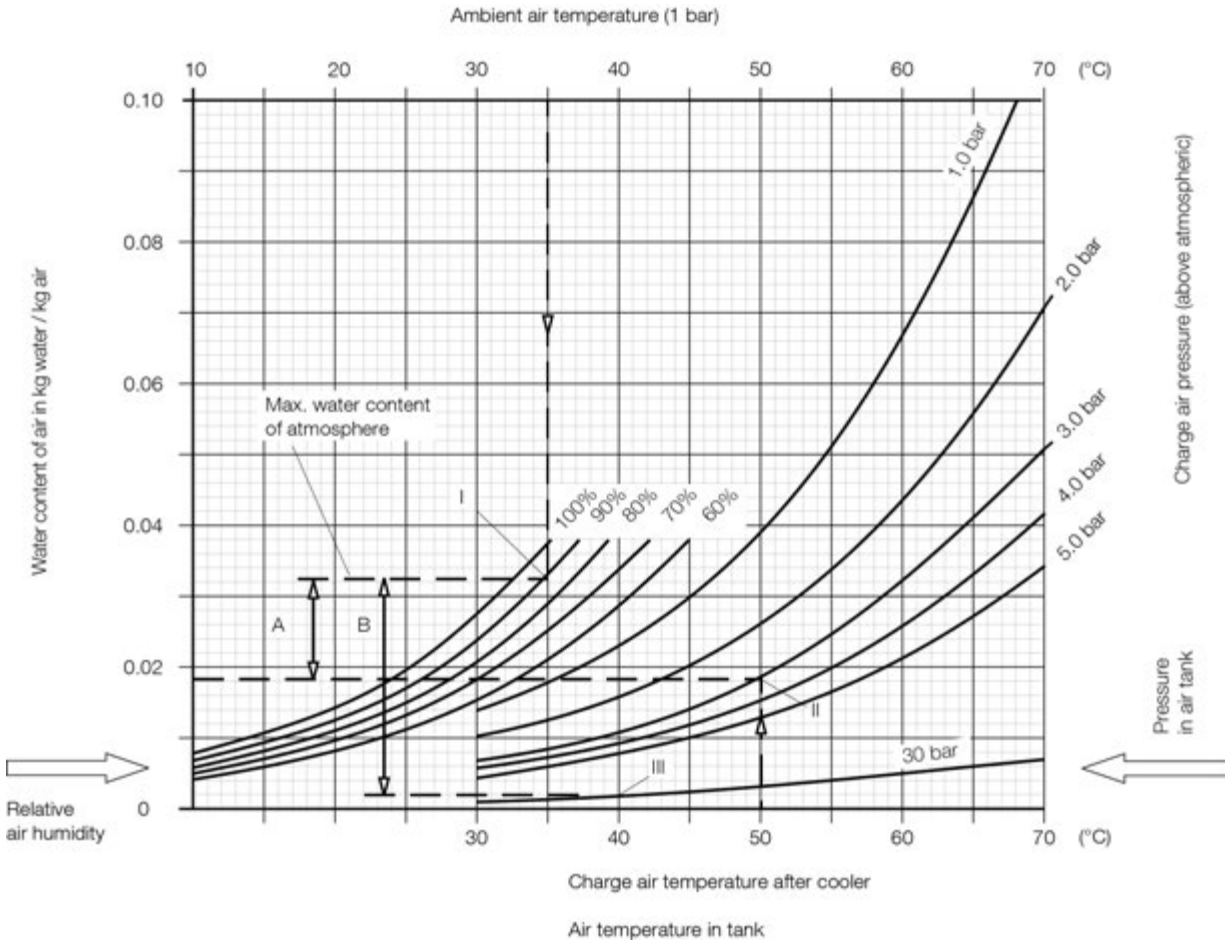

Figure 1: Nomogram for establishing the condensed water quantity in the charge air pipes and compressed air tanks

2024-05-29 - en

Example 1 - Establishing the water volume produced in the charge air pipe

1. Step	Ambient temperature	35 ℃
	relative humidity	90%
	In the diagram this results in point of intersection I,	
	i.e. the original water content with	0.032 kg water/kg air

Step 2	Charge air temperature after cooler	50 ℃
	Charge air pressure (Overpressure)	3.0 bar
	In the diagram this results in point of intersection II,	
	i.e. the reduced water content with	0.018 kg water/kg air

3. Step	The difference between I and II is the condensed water quantity A:	
	A = I – II = 0.032 – 0.018 =	0.014 kg water/kg air

4. Step	The quantity of water Q_A that accumulates per hour is obtained by multiplying the above by the engine output and specific air throughput:	
	Engine output P	1260 kW
	specific air flow rate$_e$*	8.0 kg/kWh
	$Q_A = A \cdot P \cdot I_e = 0.014 \cdot 1260 \cdot 8.0 = 141.1$ kg water/h	

* The specific air throughput depends upon the type of engine and the engine load. Approximate determination of the condensed water quantity can use the following approximate values:	
Four-stroke engines	Approx. 7.0 ... 8.0 kg/kWh,

2024-05-29 - en

Example 2 - Establishing the water volume arising in a pressure vessel

1. Step	Ambient temperature	35°C,
	relative humidity	90%.
	In the diagram this results in point of intersection I,	
	i.e. the original water content with	0.032 kg water/kg air.

2. Step	Temperature T of the air in the pressure vessel	40 °C = 313 K,
	Pressure in the pressure vessel (overpressure) $p_ü$	30 bar, corresponding to
	absolute pressure P_{abs}	31 bar or $31 \cdot 10^5$ N/m^2
	In the diagram this results in point of intersection III,	
	i.e. the reduced water content with	0.002 kg water/kg air.

3. Step	The difference between I and III is the condensed water quantity B:	
	B = I – III = 0.032 – 0.002 =	0.03 kg water/kg air.

4. Step	Multiplying by the air mass m in the pressure vessel produces the water volume QB, which arises when filling the pressure vessel:	
	$Q_B = B \cdot m$ m is calculated as follows:	
	$m = \frac{p \times V}{R \times T}$	
	In this equation:	
	The absolute pressure in the pressure vessel p_{abs}	$31 \cdot 10^5$ N/m^2
	Volume of the pressure vessel V	4.000 dm^3 = 4 m^3,
	Gas constant for air R	287 Nm/kg · K,
	Temperature T of the air in the pressure vessel	40 °C = 313 K.
	$m = \frac{31 \times 10^5 \times 4}{287 \times 313} = 138$ kg air	
	Resulting in the following	
	$Q_B = B \cdot m = 0.03 \cdot 138$ kg =	4.14 kg water

2024-05-29 - en

Specifications of intake air (combustion air)

General

The quality and condition of intake air (combustion air) have a significant effect on the engine output, wear and emissions of the engine. In this regard, not only are the atmospheric conditions extremely important, but also contamination by solid and gaseous foreign matter.

Mineral dust in the intake air increases wear. Chemicals and gases promote corrosion.

This is why effective cleaning of intake air (combustion air) and regular maintenance of the air filter are required.

When designing the intake air system, the maximum permissible overall pressure drop (filter, silencer, pipe line) of 20 mbar must be taken into consideration.

Exhaust turbochargers for marine engines are equipped with silencers and air filters as a standard.

Requirements

Liquid fuel engines: As minimum, inlet air (combustion air) must be cleaned by an ISO Coarse 45% class filter as per DIN EN ISO 16890, if the combustion air is drawn in from inside (e.g. from the machine room/engine room). If the combustion air is drawn in from outside, in the environment with a risk of higher inlet air contamination (e.g. due to sand storms, due to loading and unloading grain cargo vessels or in the surroundings of cement plants), additional measures must be taken. This includes the use of pre-separators, pulse filter systems and a higher grade of filter efficiency class at least up to ISO ePM10 50% according to DIN EN ISO 16890.

Gas engines and dual-fuel engines: As minimum, inlet air (combustion air) must be cleaned by an ISO COARSE 45% class filter as per DIN EN ISO 16890, if the combustion air is drawn in from inside (e.g. from machine room/engine room). Gas engines or dual-fuel engines must be equipped with a dry filter. Oil bath filters are not permitted because they enrich the inlet air with oil mist. This is not permissible for gas operated engines because this may result in engine knocking. If the combustion air is drawn in from outside, in the environment with a risk of higher inlet air contamination (e.g. due to sand storms, due to loading and unloading grain cargo vessels or in the surroundings of cement plants) additional measures must be taken. This includes the use of pre-separators, pulse filter systems and a higher grade of filter efficiency class at least up to ISO ePM10 50% according to DIN EN ISO 16890.

In general, the following applies:

The inlet air path from air filter to engine shall be designed and implemented airtight so that no false air may be drawn in from the outdoor.

The concentration downstream of the air filter and/or upstream of the turbocharger inlet must not exceed the following limit values.

The air must not contain organic or inorganic silicon compounds.

Properties	Limit	Unit [1)]
Dust (sand, cement, CaO, Al_2O_3 etc.)	max. 5	mg/Nm^3

Specifications of intake air (combustion air)

2021-03-23 - de

Properties	Limit	Unit [1]
Chlorine	max. 1.5	
Sulphur dioxide (SO_2)	max. 1.25	
Hydrogen sulphide (H_2S)	max. 5	
Salt (NaCl)	max. 1	
[1] One Nm^3 corresponds to one cubic meter of gas at 0 °C and 101.32 kPa.		

Table 1: Typical values for intake air (combustion air) that must be complied with

⚠ WARNING

Explosion due to flammable intake air

Severe personal injury due to the explosion of flammable intake air.

- Intake air must not be explosive.
- Intake air must not contain flammable gases.
- Intake air must not be drawn in from ATEX zones.

Specifications of intake air (combustion air)

2021-03-23 - de

Engine room ventilation and combustion air

Combustion air requirements

- The combustion air must be free from water spray, dust, oil mist and exhaust gases. See D010.000.023-17.
- The air ventilation fans shoud be designed to maintain a positive air pressure of 50 Pa (5 mmWC) in the auxiliary engine room in all running conditions.

The combustion air is normally taken from the engine room through a filter mat on the turbocharger.

In tropical condition a sufficient volume of air must be supplied to the turbocharger(s) at outside air temperature. For this purpose there must be an air duct installed for each turbocharger, with the outlet of the duct facing the respective intake air silencer. No water of condensation from the air duct must be allowed to be drawn in by the turbocharger.

In arctic condition the air must be heated to at least 5°C or other measures must be taken in engine design specification. See B 15 00 0, "Combustion air system for arctic operation".

Ventilator capacity

The capacity of the air ventilators must be large enough to cover:

- The combustion air requirements of all consumers.
- The air required for carrying off the heat emission.
- Maintain an positive air pressure in engine room.

See "List of capacities" section D 10 05 0 for information about required combustion air quantity and heat emission.

For minimum requirements concerning engine room ventilation see applicable standards such as ISO 8861.

2025-03-06 - en

This page is intentionally left blank

Turbocharger - make MAN

Description

The engines are as standard equipped with a turbocharger of the radial type MAN NR/S and TCR.

The rotor, comprising compressor, turbine wheel and shaft, is supported in floating plain bearing bushes.

The turbine wheel is an integrated part of the shaft.

Gas admission casing with gas outlet diffusor matched to the exhaust pipe arrangement and a turbine nozzle ring made of a special wear resistant material.

Air intake silencer with filter, and compressor casing with one outlet.

Lubrication of the two plain bushes is an integrated part of the engine lubricating oil system.

The turbocharger has no water cooling.

Propulsion					
No. cyl.	**5**	**6**	**7**	**8**	**9**
L21/31 - 1000rpm	-	TCR16-42x	TCR18-42x	TCR18-42x	TCR18-42x
L27/38 - 800 rpm	-	TCR18-42x	TCR20-42x	TCR20-42x	TCR20-42x
L27/38 Mk2 - 900 rpm	-	TCR18-42x	TCR20-42x	TCR20-42x	TCR20-42x
28/32A	-	NR24/R	NR24/R	NR24/R	NR26/R

L16/24					
No. cyl.	**5**	**6**	**7**	**8**	**9**
1000 rpm	TCR12-42x	TCR12-41x	TCR12-41x	TCR14-41x	TCR14-41x
1200 rpm	TCR12-42x	TCR12-41x	TCR14-41x	TCR14-41x	TCR14-41x

L21/31					
No. cyl.	**5**	**6**	**7**	**8**	**9**
900 rpm	TCR16-42x	TCR16-42x	TCR18-42x	TCR18-42x	TCR18-42x
1000 rpm	TCR16-42x	TCR16-42x	TCR18-42x	TCR18-42x	TCR18-42x

L21/31 Mk2					
No. cyl.	**5**	**6**	**7**	**8**	**9**
900 rpm	TCR14-42x	TCR16-42x	TCR16-42x	TCR16-42x	TCR18-42x
1000 rpm	TCR14-42x	TCR16-42x	TCR16-42x	TCR18-42x	TCR18-42x

L27/38					
No. cyl.	**5**	**6**	**7**	**8**	**9**
330 kW @ 720 rpm	TCR18-42x	TCR18-42x	TCR20-42x	TCR20-42x	TCR20-42x
330 kW @ 750 rpm	TCR18-42x	TCR18-42x	TCR20-42x	TCR20-42x	TCR20-42x
350 kW @ 720 rpm	-	TCR18-42x	TCR20-42x	TCR20-42x	TCR20-42x
350 kW @ 750 rpm	-	TCR18-42x	TCR20-42x	TCR20-42x	TCR20-42x

2025-03-16 - en

1689485-0.6

L27/38 Mk2				
No. cyl	**6**	**7**	**8**	**9**
720 rpm	TCR18-42x	TCR20-42x	TCR20-42x	TCR20-42x
750 rpm	TCR18-42x	TCR20-42x	TCR20-42x	TCR20-42x
900 rpm	TCR18-42x	TCR20-42x	TCR20-42x	TCR20-42x

L23/30H + Mk2					
No. cyl	**5 ECR**	**5**	**6**	**7**	**8**
720 rpm	TCR14-42x	TCR14-41x	TCR14-41x	TCR16-41x	TCR16-41x
750 rpm	TCR14-42x	TCR14-41x	TCR14-41x	TCR16-41x	TCR16-41x
900 rpm	-	-	TCR16-41x	TCR16-41x	TCR16-41x

L23/30H Mk3					
No. cyl	**5**	**6**	**7**	**8**	**9**
720 rpm	TCR14-41x	TCR14-41x	TCR16-42x	TCR16-41x	TCR16-41x
750 rpm	TCR14-41x	TCR14-41x	TCR16-42x	TCR16-41x	TCR16-41x
900 rpm	-	TCR16-41x	TCR16-41x	TCR16-41x	TCR18-41x

L23/30DF				
No. cyl	**5**	**6**	**7**	**8**
720 rpm	TCR14-42x	TCR14-41x	TCR14-41x	TCR16-41x
750 rpm	TCR14-42x	TCR14-41x	TCR14-41x	TCR16-41x
900 rpm	-	TCR14-41x	TCR14-41x	TCR16-41x

L28/32DF					
No. cyl.	**5**	**6**	**7**	**8**	**9**
720 rpm	TCR14-41x	TCR16-41x	TCR16-41x	TCR18-41x	TCR18-41x
750 rpm	TCR14-41x	TCR16-41x	TCR16-41x	TCR18-41x	TCR18-41x

L28/32H (update to TCR are in progress)					
No. cyl.	**5**	**6**	**7**	**8**	**9**
720 rpm	NR20/R	NR20/R	TCR18-41x	TCR18-41x	NR24/S
750 rpm	NR20/R	NR20/R	NR24/R	NR24/R	NR24/S

Turbocharger - make MAN
Description

2025-03-16 - en

Water washing of turbocharger - compressor

Description

During operation the compressor will gradually be fouled due to the presence of oil mist and dust in the inlet air.

The fouling reduces the efficiency of the turbocharger which will result in reduced engine performance.

Therefore manual cleaning of the compressor components is necessary in connection with overhauls. This situation requires dismantling of the turbocharger.

However, regular cleaning by injecting water into the compressor during normal operation of the engine has proved to reduce the fouling rate to such an extent that good performance can be maintained in the period between major overhauls of the turbocharger.

The cleaning effect of injecting pure fresh water is mainly based upon the mechanical effect arising, when the water droplets impinge the deposit layer on the compressor components.

The water is injected in a measured amount and within a measured period of time by means of the water washing equipment.

The water washing equipment, see fig 1, comprises two major parts. The transportable container (6) including a hand valve with handle (5) and a plug-in coupling (4) at the end of a lance.

Installed on the engine there is the injection tube (1), connected to a pipe (2) and a snap coupling (3).

The cleaning procedure is:

1) Fill the container (6) with a measured amount of fresh water. Blow air into the container by means of a blow gun, until the prescribed operation pressure is reached.
2) Connect the plug-in coupling of the lance to the snap coupling on the pipe, and depress the handle on the hand valve.
3) The water is then injected into the compressor.

The washing procedure is executed with the engine running at normal operating temperature and with the engine load as high as possible, i.e. at a high compressor speed.

The frequency of water washing should be matched to the degree of fouling in each individual plant.

2025-03-06 - en

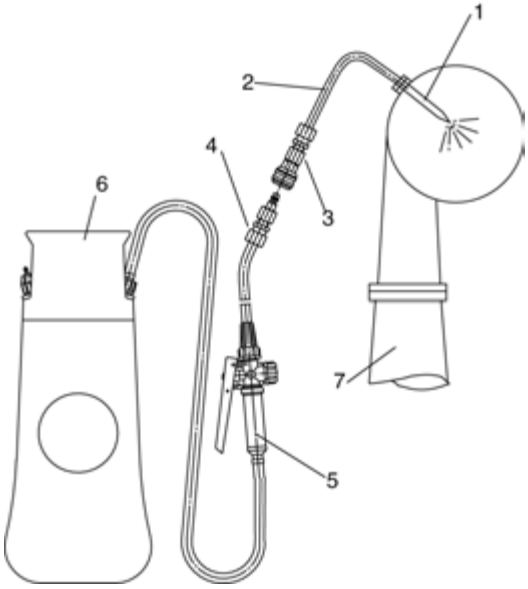

1 Injection tube
2 Pipe
3 Snap coupling
4 Plug-in coupling
5 Hand valve with handle
6 Container
7 Charge air line

Figure 1: Water washing equipment.

2025-03-06 - en

Exhaust gas system

Internal exhaust gas system

From the exhaust valves, the gas is led to the exhaust gas receiver where the fluctuating pressure from the individual cylinders is equalized and the total volume of gas led further on to the turbocharger, at a constant pressure. After the turbocharger, the gas is led to the exhaust pipe system.

The exhaust gas receiver is casted sections, one for each cylinder, connected to each other, by means of compensators, to prevent excessive stress due to heat expansion.

After each cylinder a thermosensor for reading the exhaust gas temperature is fitted.

To avoid excessive thermal loss and to ensure a reasonably low surface temperature the exhaust gas receiver is insulated.

External exhaust gas system

The exhaust back-pressure should be kept as low as possible.

It is therefore of the utmost importance that the exhaust piping is made as short as possible and with few and soft bends.

Long, curved, and narrow exhaust pipes result in higher back-pressure which will affect the engine combustion. Exhaust back-pressure is a loss of energy and will cause higher fuel comsumption.

The exhaust back-pressure should not exceed 30 mbar at MCR. An exhaust gas velocity through the pipe of maximum 35 m/sec is often suitable, but depends on the actual piping.

During commissioning and maintenance work, checking of the exhaust gas back pressure by means of a temporarily connected measuring device may become necessary. For this purpose, a measuring socket must be provided approx. 1-2 m after the exhaust gas outlet of the turbocharger at an easily accessible place. Usual pressure measuring devices require a measuring socket size of ½". This measuring socket must be provided to ensure utilisation without any damage to the exhaust gas pipe insulation.

MAN Energy Solutions will be pleased to assist in making a calculation of the exhaust back-pressure.

The gas outlet of turbocharger, the expansion bellows, the exhaust pipe, and silencer, (in case of silencer with spark arrestor care must be taken that the cleaning parts are accessible), must be insulated with a suitable material.

The insulation should be shielded by a thin plating, and should comply with the requirements of the classification society and/or the local authorities.

Exhaust pipe dimensions

It should be noted that concerning the maximum exhaust gas velocity the pipe dimension after the expansion bellows should be increased for some of the engines.

The wall thickness of the external exhaust pipe should be min. 3 mm.

2025-03-13 - en

Exhaust pipe mounting

When the exhaust piping is mounted, the radiation of noise and heat must be taken into consideration.

Because of thermal fluctuations in the exhaust pipe, it is necessary to use flexible as well as rigid suspension points.

In order to compensate for thermal expansion in the longitudinal direction, expansion bellows must be inserted. The expansion bellows should preferably be placed at the rigid suspension points.

Note: The exhaust pipe must not exert any force against the gas outlet on the engine.

One sturdy fixed-point support must be provided for the expansion bellows on the turbocharger. It should be positioned, if possible, immediately above the expansion bellows in order to prevent the transmission of forces, resulting from the weight, thermal expansion or lateral displacement of the exhaust piping, to the turbocharger.

The exhaust piping should be mounted with a slope towards the gas outlet on the engine. It is recommended to have drain facilities in order to be able to remove condensate or rainwater.

Position of gas outlet on turbocharger

B 16 02 0 shows turning alternatives positions of the exhaust gas outlet. Before dispatch of the engine exhaust gas outlet will be turned to the wanted position.

The turbocharger is, as standard, mounted in the front end.

Exhaust gas boiler

To utilize the thermal energy from the exhaust, an exhaust gas boiler producing steam or hot water can be installed.

Each engine should have a separate exhaust gas boiler or, alternatively, a common boiler with separate gas ducts. Concerning exhaust gas quantities and temperature, *see "List of capacities" D 10 05 0,* and *"Engine performance" D 10 10 0.*

The discharge temperature from the exhaust gas boiler should not be lower than 180°C (in order to avoid sulphuric acid formation in the funnel).

The exhaust gas boilers should be installed with by-pass entering in function at low-load operation.

The back-pressure over the boiler must be included in the back-pressure calculation.

Expansion bellows

The expansion bellows, which is supplied separately, must be mounted directly on the exhaust gas outlet, *see also E 16 01 1-2.*

2025-03-13 - en

Exhaust silencer

The position of the silencer in the exhaust gas piping is not decisive for the silencing effect. It would be useful, however, to fit the silencer as high as possible to reduce fouling. The necessary silencing depends on the loudness of the exhaust sound and the discharge from the gas outlet to the bridge wing.

The exhaust silencer, *see E 16 04 2-3-5-6,* is supplied loose with counterflange, gaskets and bolts.

2025-03-13 - en

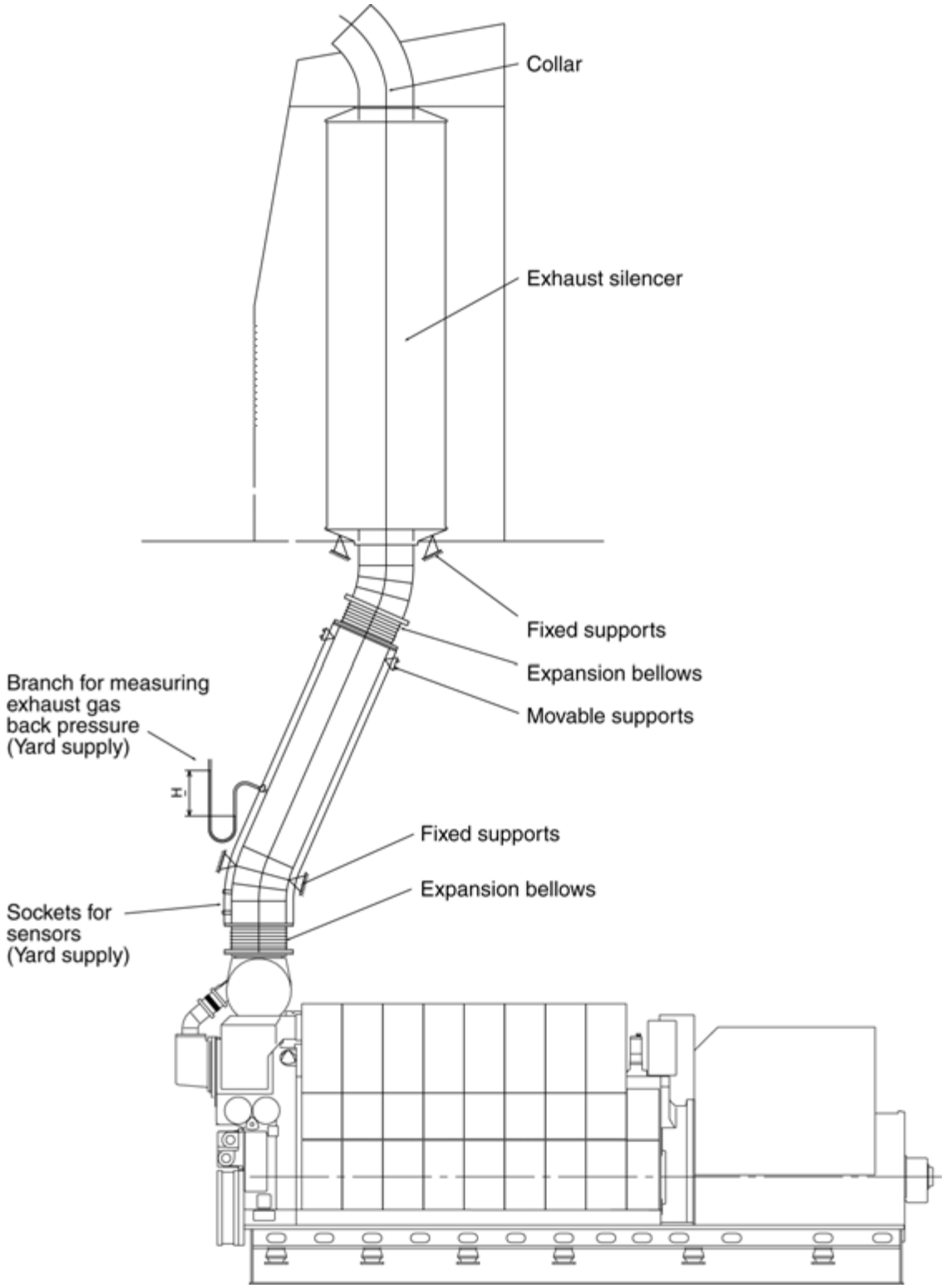
Collar
Exhaust silencer
Fixed supports
Expansion bellows
Movable supports
Branch for measuring exhaust gas back pressure (Yard supply)
H
Fixed supports
Expansion bellows
Sockets for sensors (Yard supply)

2025-03-13 - en

Resulting installation demands

If the recommended exhaust gas back pressure cannot be kept due to exhaust gas after treatment installations. Following items need to be considered.

Exhaust gas back pressure after turbocharger	
Operating pressure Δp_{exh}, standard	0 ... 30 mbar
Operating pressure Δp_{exh}, range with increase of fuel consumption	30 ... 60 mbar
Operating pressure Δp_{exh}, where a customized engine matching is needed	> 60 mbar

Table 1: Exhaust gas back pressure after turbocharger

Intake air pressure turbocharger	
Operating pressure Δp_{intake}, standard	0 ... –20 mbar
Operating pressure Δp_{intake}, range with increase of fuel consumption	–20 ... –40 mbar
Operating pressure Δp_{intake}, where a customized engine matching is needed	< –40 mbar

Table 2: Intake air pressure turbocharger

Sum of the exhaust gas back pressure after turbocharger and the absolute value of the intake air pressure before turbocharger	
Operating pressure Δp_{exh} + Abs(Δp_{intake}), standard	0 ... 50 mbar
Operating pressure Δp_{exh} + Abs(Δp_{intake}), range with increase of fuel consumption	50 ... 100 mbar
Operating pressure Δp_{exh} + Abs(Δp_{intake}), where a customized engine matching is needed	> 100 mbar

Table 3: Sum of the exhaust gas back pressure after turbocharger and the absolute value of the intake air pressure before turbocharger

Maximum exhaust gas pressure drop – Layout

- Shipyard and supplier of equipment in exhaust gas line have to ensure that pressure drop Δp_{exh} over entire exhaust gas piping incl. pipe work, scrubber, boiler, silencer, etc. must stay below stated standard operating pressure at all operating conditions.
- It is recommended to consider an additional 10 mbar for consideration of aging and possible fouling/staining of the components over lifetime.
- Possible counter measures could be a proper dimensioning of the entire flow path including all installed components or even the installation of an exhaust gas blower if necessary.
- At the same time the pressure drop Δp_{intake} in the intake air path must be kept below stated standard operating pressure at all operating conditions and including aging over lifetime.

2025-03-13 - en

This page is intentionally left blank

2025-03-13 - en

Pressure drop in exhaust gas system

General

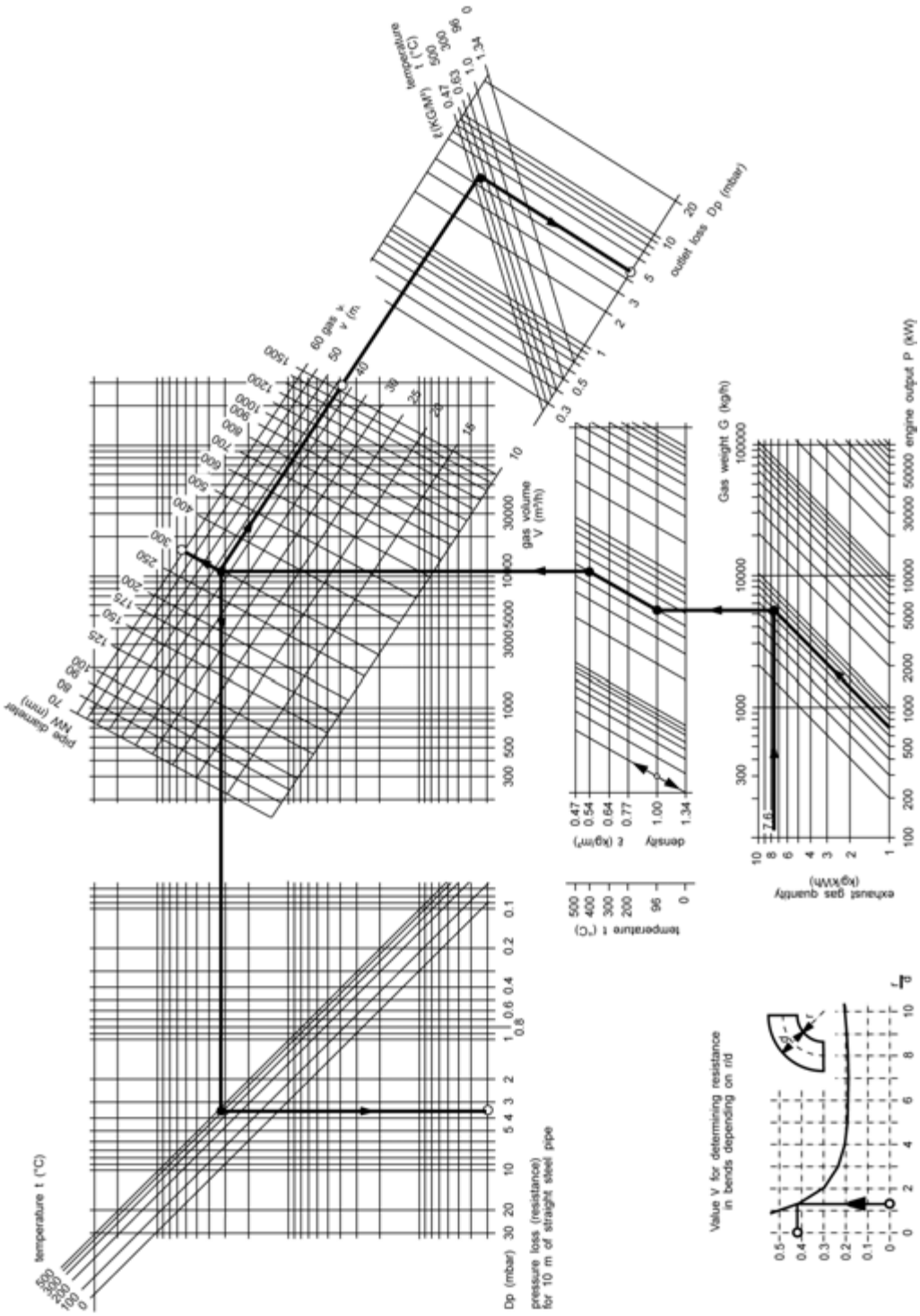

Figure 1: Nomogram for pressure drop in exhaust gas piping system.

2025-03-13 - en

Example

Where:	Engine rating	735 kW
	Exhaust gas quantity	7.6 kg/kWh
	Exhaust gas temperature **t** (under full-load conditions)	400°C
	Ambient air conditions	20°C, 980 mbar
	Density of air ρ_L	1.165 kg/m³
	Exhaust pipe system (pipes laid out without changes in section)	
	Straight runs of pipe horizontal	12 m (L_H)
	vertical	8 m (L_V)
	Three 90° pipe bends (with r/d = 1.3)	
	1 absorbtion silencer (35 dBA damping)	
Required:	Total pressure loss across exhaust gas system (static and dynamic) = flow resistance in pipes and silencer + outlet losses - up-draught	
From the diagram:	Density of exhaust gasses ρ_A	0.54 kg/m³
	Exhaust gas volume	10200 m³/h
	With a pipe diameter of 300 mm this gives:	
	Exhaust gas velocity	42 m/sec
	Resistance per 10 m of straight run of pipe (at 400°C)	3.6 mbar
	Outlet loss (at 400°C)	4.7 mbar ($\rho_A \times \frac{V^2}{2} \times 10^{-2}$)
	ζ value for pipe bend (at r/d = 1.3)	0.41
	Resistance of a 90° pipe bend (0.41 x 4.7)	1.9 mbar ($\zeta \times \rho_A \times \frac{V^2}{2} \times 10^{-2}$)
	Up-draught in vertical pipe	8 (1.165 - 0.54) x 9.81 = 50 Pa = 0.5 bar
Result:	The total pressure loss in the system is	
	Straight runs of pipe (12 + 8 = 20 m) = 2 x 3.6	7.2 mbar
	3 pipe bends of 1.9 mbar each	5.7 mbar
	Silencer (35 dB(A) without spark arrestor) (see product manual page E 16 04 3)	1.7 mbar
	Outlet loss	4.7 mbar
		19.3 mbar
	Lift	- 0.5 mbar
		18.8 mbar

Permissible total resistance:
IMO Tier II: 30 mbar
IMO Tier III (SCR), scrubber and other aftertreatment: 50 mbar

2025-03-13 - en

Density of air

Density of air can be determined by following empiric, formula*:

$$\rho = \frac{348.3}{t + 273} \times P$$

ρ = density kg/m³
P = air pressure bar
t = temperature °C

* This formula is only valid between -20° to 60°C.

Example

At ambient air conditions 20°C and pressure 0.98 bar, the density is:

$$\rho = \frac{348.3}{20 + 273} = 1.165 \text{ kg/m}^3$$

At 1.0132 bar:

t	-20	0	20	40	60
ρ	1.4	1.29	1.21	1.13	1.06

2025-03-13 - en

This page is intentionally left blank

SCR (Selective Catalytic Reduction)

Introduction

SCR technology

MAN Energy Solutions decided to develop it's own SCR technology to be able to optimise the emissions technology and the engine performance in addition with the MAN Energy Solutions own SCR control programme to the utmost customer benefit.

Common SCR systems require constantly high exhaust gas temperatures. The MAN Energy Solutions SCR system however is an integrated system (engine + SCR) that is automatically adjusting the exhaust gas temperature in an optimal way to ensure ideal operation of both engine and SCR. For example, the engine is operating at optimum condition, however the system is registering an increasing backpressure over the SCR reactor. To resolve this, the regeneration feature of the integrated SCR system is activated and the wastegate engaged to increase exhaust gas temperature. After a short time, the SCR system is regenerated and the engine can continue operation in the design point area. Thus the SCR assures ideal engine operation by regenerating the SCR system whenever necessary to achieve minimum fuel oil consumption. Nevertheless, the SCR system complies with the IMO Tier III regulations on NO_X emissions at any time.

Fuels for operation with SCR catalyst

The SCR components were special designed for operation with heavy fuel oil (HFO) in accordance with specification DIN ISO 8217 up to sulphur content of 3.5 %. *See description 010.000.023-05, "Specification of Heavy Fuel Oil (HFO)".*

2025-03-13 - en

Engine overview and SCR system components

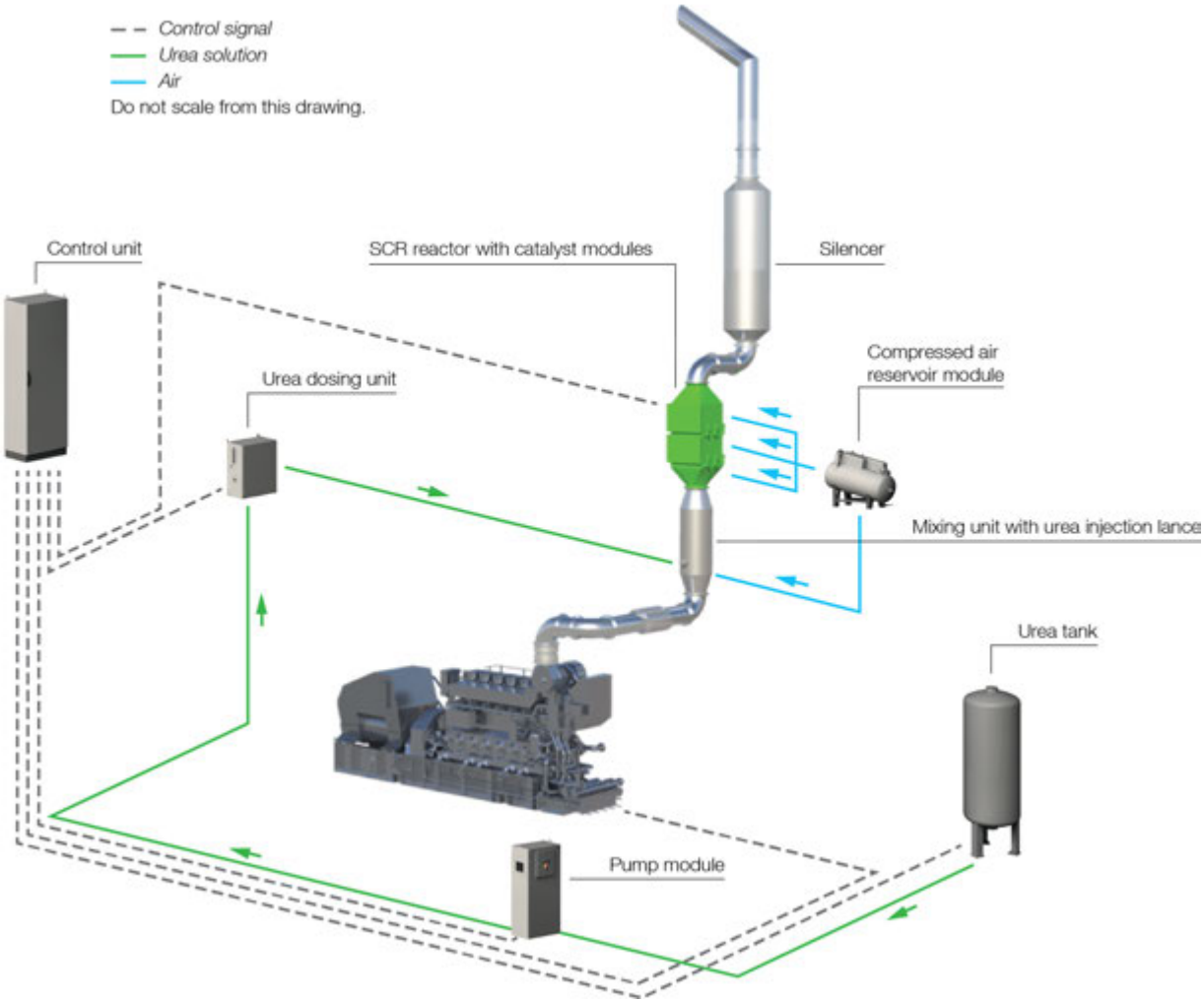

Figure 1: SCR system components overview

Engine and operation

Certification IMO Tier III

The engine's certification for compliance with NO_x limits according to NO_x technical code will be done according scheme B, meaning engine + SCR will be handled as separate parts. Certification has to be in line with IMO Resolution MEPC 198(62), adopted 15 July 2011.

Emission level engine: IMO Tier II

Emission level engine + SCR catalyst: IMO Tier III

2025-03-13 - en

Certification of engine

Engine will be tested as specified in section Programme for Factory Acceptance Test (FAT) according to relevant classification rules. It will also certified as member or parent engine according NO_x technical code for emission category IMO Tier II. *See description B 21 01 1, 1356501-5, "Shop test programme for marine GenSet".*

Certification of complete system (engine plus SCR system)

Certification of SCR catalyst and components will be done in accordance to MEPC 198(62) for a scaled, standardised SCR reactor and SCR components based on product features and following scaled parameters:

- Exhaust gas mass flow
- Exhaust gas composition (NO_x, O_2, CO_2, H_2O, SO_2)
- Exhaust gas temperature
- Catalyst modules (AV, SV or LV value)
- Reducing agent
- Desired NO_x conversion rate

The On-board Confirmation Test required for a scheme B certification will be done for the parent engine plus SCR system for a group according to IMO resolution MEPC 198(62).

SCR - Special notes

Principle of SCR technology

The selective catalytic reduction SCR uses ammonia (NH_3) to convert nitrogen oxides in the exhaust gas to harmless nitrogen and water within a catalyst. However, ammonia is a hazardous substance which has to be handled carefully to avoid any dangers for crews, passengers and the environment. Therefore urea as a possible ammonia source is used. Urea is harmless and, solved in water, it is easy to transport and to handle. Today, aqueous urea solutions of 32.5 % or 40 % are the choice for SCR operation in mobile applications on land and at sea.

Using urea, the reaction within the exhaust gas pipe and the catalyst consists of two steps. In the beginning, the urea decomposes in the hot exhaust gas to ammonia and carbon dioxide using the available water in the injected solution and the heat of the exhaust gas:

$(NH_2)_2CO + H_2O \rightarrow 2NH_3 + CO_2$ [1]

The literal NOx-reduction takes place supported by the catalyst, where ammonia reduces nitrogen oxides to nitrogen and water.

$4NO + 4NH_3 + O_2 \rightarrow 4N_2 + 6H_2O$ [2]

System overview

The MAN Energy Solutions SCR system is available in different sizes to cover the whole medium speed engine portfolio. The SCR system consists of the reactor, the mixing unit, the urea supply system, the pump module, the dosing unit, the control unit and the soot-blowing system.

After initial start-up of the engine, the SCR system operates continuously in automatic mode. The amount of urea injection into the SCR system depends on the operating conditions of the engine. Since the control unit of the SCR system is connected to the engine control system all engine related informations are continuously and currently available. This is one of the important benefits of the MAN Energy Solutions SCR system.

2025-03-13 - en

The urea is sprayed into the mixing unit which is part of the exhaust gas duct. Entering the reactor the reducing agent starts to react with NO_x coming from the combustion. The amount of reducing agent is controlled by the dosing unit, which is supported by a pump connected to an urea tank. It furthermore regulates the compressed air flow for the injector.

Each reactor is equipped with a soot blowing system to prevent blocking of the SCR catalyst by ashes and soot.

Scope of supply

- Engine in standard configuration according stated emission level (see above).
- Engine attached equipment for control of the temperature after turbine.
- Engine SaCoS software including functions for control of temperature after turbine and for optimising engine + SCR performance.
- IMO Tier III Certificate.
- MAN Energy Solutions will act as "Applicant" within the meaning of the IMO.

Main components of SCR system in the standard scoper supply

- SCR reactor
- Catalyst modules
- Soot blowing system
- Dosing unit
- Mixing unit
- Urea injection lance
- Control unit SCR
- Pump module
- Compressed air reservoir module

Not included in the standard scope of supply, among others

- Urea storage tank
- Urea storage tank minimum level switch
- Piping
- insulation

Operation

Standard operation

Common SCR systems provided by third parties require constantly high exhaust gas temperatures. The MAN Energy Solutions SCR system on the other hand is an integrated engine + SCR system that allows operation on lower exhaust gas temperature levels.

The MAN Energy Solutions SCR system automatically adjusts the engine exhaust gas temperature to ensure both optimum engine + SCR operation. For a maximum on safety the surveillance mode is always activated.

Enhanced operation

The MAN Energy Solutions SCR system assures ideal engine operation, regenerating the SCR system whenever necessary to account for a minimum fuel oil consumption while complying with IMO Tier III emission limits at all times. Dependent on the ambient conditions it may be needed to adapt the engine load during the regeneration phase.

2025-03-13 - en

Boundary conditions for SCR operation

Please consider following boundary conditions for the SCR operation:

- Temperature control of temperature turbine outlet:
  - By adjustable waste gate (attached to engine).
  - Set point 320 °C as minimum temperature for active SCR.
  - Set point 290 °C as minimum temperature for deactivated SCR.
- Fuel:
  - In line with MAN Energy Solutions specification, maximum 3.5 % sulfur content.
- SCR active in following range:
  - 10 °C (arctic) up to 45 °C (tropic) intake air temperature.
  - In the range of 25 % to 100 % engine load.
- IMO requirements for handling of SCR operation disturbances:
  - In case of SCR malfunction IMO regulations allow that the system will be turned off and the ship's journey will be continued to the port of destination. There, the ship needs to be repaired, if the emission limits of the harbor/sea area would be exceeded.

    Accordingly, the vessel may leave a port in case it will only sail in areas requiring IMO II, even if the SCR system is still out of service.
- Differential pressure Δp SCR (normal operation):
  - Max. 20 mbar.

For the design of the complete exhaust gas line, please consider:

- Maximum permissible exhaust gas back pressure (to be calculated from engine turbocharger outlet to end of complete exhaust gas line):
  - Max. 50 mbar (at 100 % engine load).
- Maximum permissible temperature drop of exhaust gas line (to be calculated as difference of exhaust gas temperature turbine outlet and temperature SCR inlet):
  - Max. 5 K in the range of 25 % to 100 % engine load (calculated at 5 °C air temperature in the engine room).
- Recommended for exhaust gas line:
  - Insulation according to SOLAS standard.

NOTICE

The SCR system requires high exhaust gas temperatures for an effective operation. MAN Energy Solutions therefore recommends to arrange the SCR as the first device in the exhaust gas line, followed by other auxiliaries like boiler, silencer etc.

Performance coverage for SCR system

- Performance guarantee for engine plus SCR within defined in section Boundary conditions for SCR operation.
- Guarantee for engine plus SCR for marine applications to meet IMO Tier III level as defined by IMO within defined in section Boundary conditions for SCR operation (details will be handled within the relevant contracts).

2025-03-13 - en

NOTICE

Please be aware

All statements in this document refer to MAN Energy Solutions SCR systems only.

MAN Energy Solutions can only deliver an IMO Tier III certificate and act as “Applicant” (within the meaning of the IMO) if the engine plus SCR system is supplied by MAN Energy Solutions.

If the engine is supplied without MAN Energy Solutions SCR system, only a standard warranty for a single engine will be given. No guarantee regarding minimum exhaust gas temperature after turbine or emissions after third party SCR or suitability of the engine in conjunction with a third party SCR system can be given.

If the engine is supplied without MAN Energy Solutions SCR system, no optimisation function within SaCoS can be applied and as maximum exhaust gas temperature after turbine only will be possible:

- 320 °C (25 % load – 100 % load).

2025-03-13 - en

Main dimensions, weights and views of SCR components

Depending on the individual projects SCR properties may vary. The following dimensions and weights are for guidance only.

SCR reactor

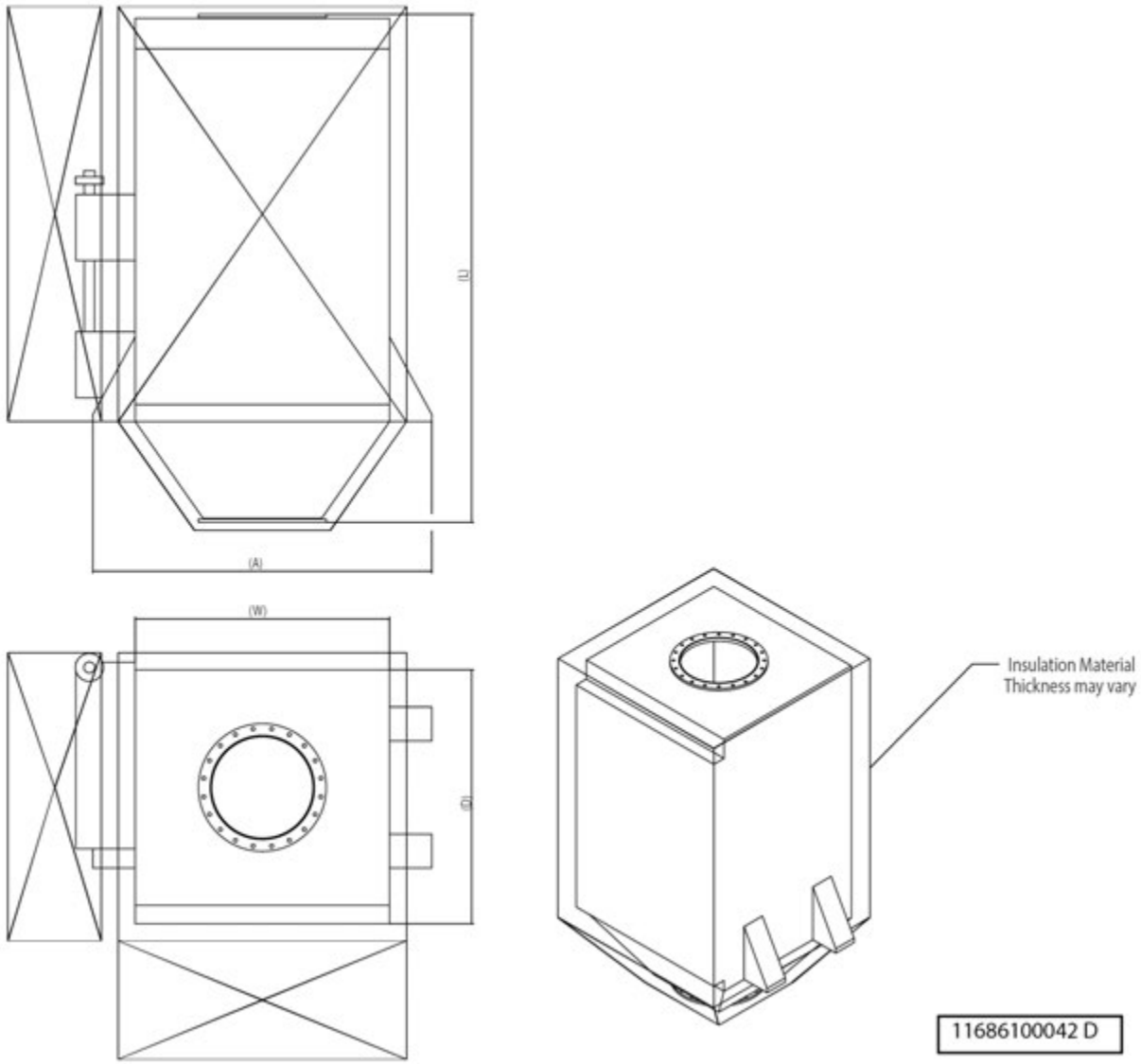

Figure 2: SCR reactor

Control cab.	Engine power approximately	L (Total length)	D (Without insulation)	W (Without insulation)	A (With anchorage)	Maximum weight structurally[1)]	Service space
No.	kW	mm	mm	mm	mm	kg	min. mm
1	0 – 800	2,800	1,000	1,000	1,600	1,350	750
2	801 – 1,400	2,900	1,250	1,250	1,800	2,050	750
3	1,401 – 2,400	3,000	1,500	1,500	2,000	2,950	750
4	2,401 – 3,650	3,100	1,750	1,750	2,300	3,900	750

2025-03-13 - en

Control cab.	Engine power approximately	L (Total length)	D (Without insulation)	W (Without insulation)	A (With anchorage)	Maximum weight structurally[1]	Service space
No.	kW	mm	mm	mm	mm	kg	min. mm
5	3,651 – 4,900	3,200	2,000	2,000	2,680	5,050	750
6	4,901 – 6,000	3,400	2,350	2,350	2,930	6,550	750
7	6,001 – 7,800	3,600	2,900	2,350	2,930	8,000	750
8	7,801 – 9,000	3,600	2,900	2,900	3,430	9,600	750
9	9,001 – 12,000	3,900	3,400	2,900	3,430	11,450	750
10	12,001 – 13,700	3,900	3,400	3,400	4,030	13,300	750
11	13,701 – 15,000	4,100	3,950	3,400	4,030	15,300	750
12	15,001 – 17,000	4,100	3,950	3,950	4,630	17,450	750
13	17,001 – 20,000	4,300	4,450	3,950	4,630	19,700	750
14	20,001 – 21,600	4,300	4,450	4,450	5,130	21,950	750
							DRW 11686100042 D-001

[1] See section .

Table 1: SCR reactor

NOTICE

In accordance with applicable security policies there must be provided adequate maintenance space, which permits the safe execution of all necessary maintenance work

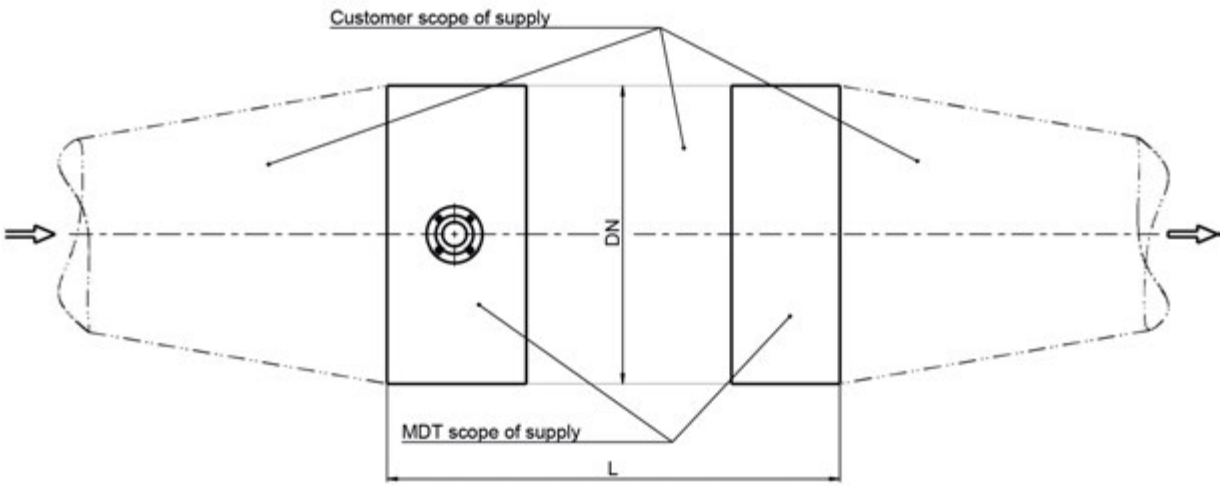

Figure 3: Mixing unit with urea lance

2025-03-13 - en

Mixing unit with urea lance

Mixing unit	Engine power approximately	Mixing pipe[1)]	Length straight mixing pipe (L)
No.	kW	DN	mm
1	0 – 1,000	500	3,400
2	1,001 – 2,000	600	3,400
3	2,001 – 3,000	800	3,550
4	3,001 – 4,200	1,000	3,650
5	4,201 – 5,400	1,100	3,700
6	5,401 – 6,800	1,200	3,800
7	6,801 – 8,500	1,400	3,850
8	8,501 – 10,500	1,500	4,000
9	10,501 – 13,000	1,600	4,400
10	13,001 – 20,000	2,100	4,610
11	20,001 – 21,600	2,300	5,010

[1)] Diameter mixing pipe differs from exhaust pipe diameter.

Table 2: Mixing unit with urea lance

Dosing unit

Dosing unit	Height	Width	Depth	Weight
No.	mm	mm	mm	kg
1	800	800	300	80

Table 3: Dosing unit

SCR control cabinet

Control cabinet	Height	Width	Depth	Weight
No.	mm	mm	mm	kg
1	2,100	800	400	220

Table 4: SCR control cabinet

Pump module

Pump module	Height	Width	Depth	Weight
No.	mm	mm	mm	kg
1	1,300	700	300	120

Table 5: Pump module

Compressed air reservoir module

Air module	Height	Width	Depth	Weight
No.	mm	mm	mm	kg
1	1,050	1,500	500	250

Table 6: Compressed air reservoir module

2025-03-13 - en

Waste gate

Temperature after turbine control by continuously adjustable waste gate (see flap 7 in figure 4)

The waste gate is used to by-pass the turbine of the turbocharger with a part of the exhaust gas. This leads to a charge air pressure reduction and the temperature after turbine is increased.

For plants with an SCR catalyst, waste gate is necessary in order to ensure proper performance of SCR.

In case the temperature before SCR falls below the set minimum exhaust gas temperature value, the waste gate is opened gradually in order to blow-off exhaust gas before the turbine until the exhaust gas temperature before the SCR catalyst has reached the required level.

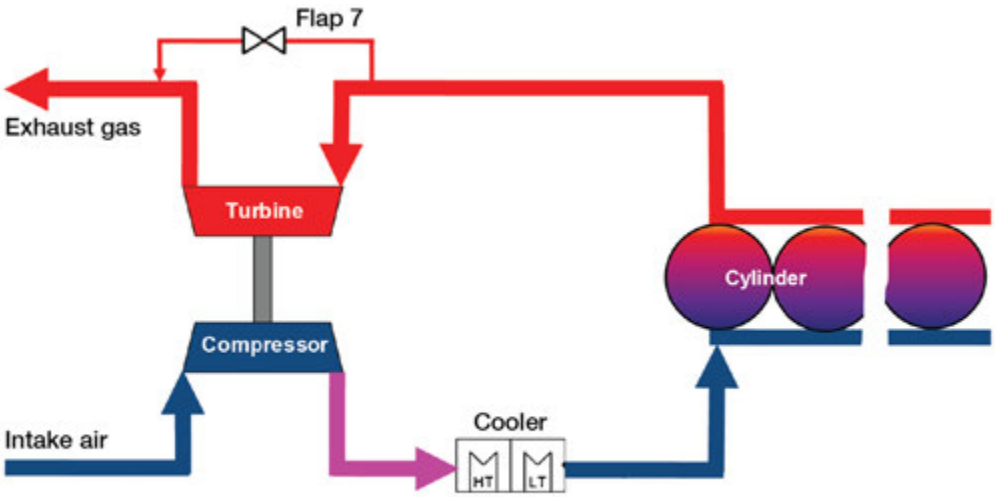

Figure 4: Overview flaps

2025-03-13 - en

Specification for engine supplies

Specification of urea solution

Use of good quality urea solution is essential for the operation of a SCR catalyst. Using urea solution not complying with the specification below e.g. agricultural urea, can either cause direct operational problems or long-term problems like deactivation of the catalyst.

NOTICE

The overall SCR system is designed for one of the two possible urea solution qualities (32.5 % AdBlue® or 40 % concentration) as listed in the tables below. This must be taken into account when ordering. The mixture of the both different solutions is not permissible!

	Urea solution concentration [%] **39 - 41**	**ISO 22241-2 Annex C**
Density at 20 °C [g/cm^3]	1.105-1.115	DIN EN ISO 12185
Refractive index at 20 °C	1.3930-1.3962	ISO 22241-2 Annex C
Biuret [%]	max. 0.5	ISO 22241-2 Annex E
Alkality as NH_3 [%]	max. 0.5	ISO 22241-2 Annex D
Aldehyde [mg/kg]	max. 10	ISO 22241-2 Annex F
Insolubles [mg/kg]	max. 20	ISO 22241-2 Annex G
Phosphorus (as PO_4) [mg/kg]	max. 0.5	ISO 22241-2 Annex H
Calcium [mg/kg]	max. 0.5	ISO 22241-2 Annex I
Iron [mg/kg]	max. 0.5	ISO 22241-2 Annex I
Magnesium [mg/kg]	max. 0.5	ISO 22241-2 Annex I
Sodium [mg/kg]	max. 0.5	ISO 22241-2 Annex I
Potassium [mg/kg]	max. 0.5	ISO 22241-2 Annex I
Copper [mg/kg]	max. 0.2	ISO 22241-2 Annex I
Zinc [mg/kg]	max. 0.2	ISO 22241-2 Annex I
Chromium [mg/kg]	max. 0.2	ISO 22241-2 Annex I

Table 7: Urea 40 % solution specification

	Urea solution concentration [%] **31.8 - 33.2**	**ISO 22241-2 Annex C**
Density at 20 °C [g/cm^3]	1.087-1.093	DIN EN ISO 12185
Refractive index at 20 °C	1.3814-1.3843	ISO 22241-2 Annex C
Biuret [%]	max. 0.3	ISO 22241-2 Annex E

2025-03-13 - en

	Urea solution concentration [%] 31.8 - 33.2	ISO 22241-2 Annex C
Alkality as NH_3 [%]	max. 0.2	ISO 22241-2 Annex D
Aldehyde [mg/kg]	max. 5	ISO 22241-2 Annex F
Insolubles [mg/kg]	max. 20	ISO 22241-2 Annex G
Phosphorus (as PO_4) [mg/kg]	max. 0.5	ISO 22241-2 Annex H
Calcium [mg/kg]	max. 0.5	ISO 22241-2 Annex I
Iron [mg/kg]	max. 0.5	ISO 22241-2 Annex I
Magnesium [mg/kg]	max. 0.5	ISO 22241-2 Annex I
Sodium [mg/kg]	max. 0.5	ISO 22241-2 Annex I
Potassium [mg/kg]	max. 0.5	ISO 22241-2 Annex I
Copper [mg/kg]	max. 0.2	ISO 22241-2 Annex I
Zinc [mg/kg]	max. 0.2	ISO 22241-2 Annex I
Chromium [mg/kg]	max. 0.2	ISO 22241-2 Annex I

Table 8: Urea 32.5 % solution specification

2025-03-13 - en

Engine supply systems

SCR system

General

The SCR system uses aqueous urea solution and a catalyst material to transform the pollutant nitrogen oxides into harmless nitrogen and water vapor. The main components of the SCR system are described in the following section.

For further information read section "SCR - Special notes".

As-delivered conditions and packaging

All components will be delivered and packaged in a seaworthy way (with dry agent, wooden boxing, shrink wrapped). Black carbon steel components will be coated with an anti-corrosive painting. Stainless steel components will not be coated.

The original packaging should not be removed until the date of installation.

The physical integrity of the packaging must be checked at the date of delivery.

Transportation and handling

Compressed air reservoir module (MOD-085)

Transport of the compressed air reservoir module can be organised by crane, via installed metal eyelets on the top side or fork-lifter.

Urea pump module (MOD-084)

Transport of the urea pump module can be organised by crane, via installed metal eyelets on the top side.

Dosing unit (MOD-082)

Transport of the dosing unit can be organised by crane, via installed metal eyelets on the top side.

Urea injection lance and mixing unit (MOD-087)

Transport of the mixing unit can be organised by crane, via two installed metal eyelets. For horizontal lifting it is sufficient using one of the metal eyelets.

Using a vertical way, the two cables each fixed on one metal eyelet have to be stabilised by a transversal bar.

NOTICE

The metal eyelets are designed to carry only the segments of the mixing unit, further weights are not allowed (e.g. complete welded mixing pipe).

SCR reactor (R-001)

Transport of the reactor can be organised by crane, via installed metal eyelets on the top side.

SCR control unit

Transport of the reactor can be organised by crane, via installed metal eyelets on the top side.

2025-03-13 - en

Storage

Compressed air reservoir module (MOD-085), urea pump module (MOD-084), dosing unit (MOD-082), SCR control unit and sensor elements have to be stored in dry and weather-resistant conditions.

Catalyst elements shall be handled free from shocks and vibrations. Furthermore, catalyst elements have to be stored in dry and weather-resistant conditions. Keep oils or chemicals away from catalyst elements. Seaworthy packaging is only a temporary protection.

Components and assemblies of the SCR system

Catalyst elements

The catalyst elements are placed in metallic frames, so called modules. Due to the honeycomb structure of the catalyst elements, the catalytic surface is increased. The active component Vanadium pentoxide (V2O5) in the surface supports the reduction of NOx to harmless nitrogen.

The effectivity of the catalytic material decreases over time because of poisoning via fuel oil components or thermal impact. The durability depends on the fuel type and conditions of operation.

The status of catalyst deactivation is monitored continuously and the amount of urea injected is adapted according to the current status of the catalyst.

Compressed air reservoir module (MOD-085) and soot blowing system (MOD-086)

The compressed air required for the operation of the SCR system is provided by the compressed air module. It receives its compressed air via the ship´s compressed air grid. For the quality requirements read section Specification of compressed air. The main supply line feeds the compressed air reservoir module, where a compressed air tank is installed. This high-pressure tank is a reservoir with enough capacity to ensure the supply of the dosing unit and the air consumption for the periodically cleaning of the catalysts´ surface, by avoiding fluctuations in the soot blowing system. In case of black out the volume of the tank will be used for flushing the urea line and nozzle.

The module has to be positioned close to the reactor and the dosing unit. The maximum length of the compressed air line to the soot blowing system is 10 m.

The soot blower valves are positioned upstream each catalyst layer in order to clean the complete surface of the catalyst elements by periodical air flushing. The soot blowing always has to be in operation while engine running.

Urea pump modul (MOD-084)

The urea pump module boosts urea to the dosing unit and maintains an adequate pressure in the urea lines. The complete module is mounted in a standard cabinet for wall fastening. Upstream of the supply pump, a filter is installed for protection of solid pollutants. Downstream, the module is equipped with a return line to the urea storage tank with a pressure relief valve to ensure the required urea flow.

The urea pump module has to be positioned on a level below the minimum urea level of the urea storage tank. The pump accepts a maximum pressure loss of 2 bar. One urea pump module can supply up to four SCR systems.

2025-03-13 - en

NOTICE

Urea quality according section Specification of urea solution is required. For urea consumption calculation for Tier III read section Urea consumption for emission standard IMO Tier III.

Dosing unit (MOD-082)

The dosing unit controls the flow of urea to the injection nozzle based on the operation of the engine. Furthermore it regulates the compressed air flow to the injector.

In order to avoid clogging due to the evaporation of urea in the urea pipe and in the nozzle, a line between compressed air line and urea line is installed. An installed solenoid valve will open to flush and cool the urea line and nozzle with compressed air before and after injecting urea into the exhaust gas.

The dosing unit has to be installed close to the urea injection lance and mixing unit (maximum pipe length 5 m).

Urea injection lance and mixing unit (MOD-087)

The urea solution will be injected into the exhaust gas using a two-phase nozzle. The urea will be atomised with compressed air. The evaporation of the urea occurs immediately when the urea solution gets in contact with the hot exhaust gas.

The urea injection and the mixing unit have to be positioned according to MAN Energy Solutions requirements. In general, the mixing section is between 3.0 – 4.5 m long and of DN 500 to DN 2,300. The mixing duct is a straight pipe upstream of the reactor. The exact length has to be calculated. Additional, it has to be considered that an inlet zone upstream the reactor of 0.5 x diameter of the exhaust gas pipe has to be foreseen.

SCR reactor (R-001)

Each engine is equipped with its own SCR reactor and it is fitted in the exhaust gas piping without a by-pass. The SCR reactor housing is a steel structure with an inlet cone. The reactor configuration is vertical and consists of several layers of catalysts. For horizontal installation, please contact MAN Energy Solutions. The reactor is equipped with differential pressure and temperature monitoring, openings for inspection, a maintenance door for service and the soot blowing system for each layer.

The maximum temperature of the exhaust gas is 450 °C and a minimum exhaust gas temperature is required to ensure a reliable operation. Therefore temperature indicators are installed in the inlet and outlet of the reactor in order to monitor and control the optimum operating range.

2025-03-13 - en

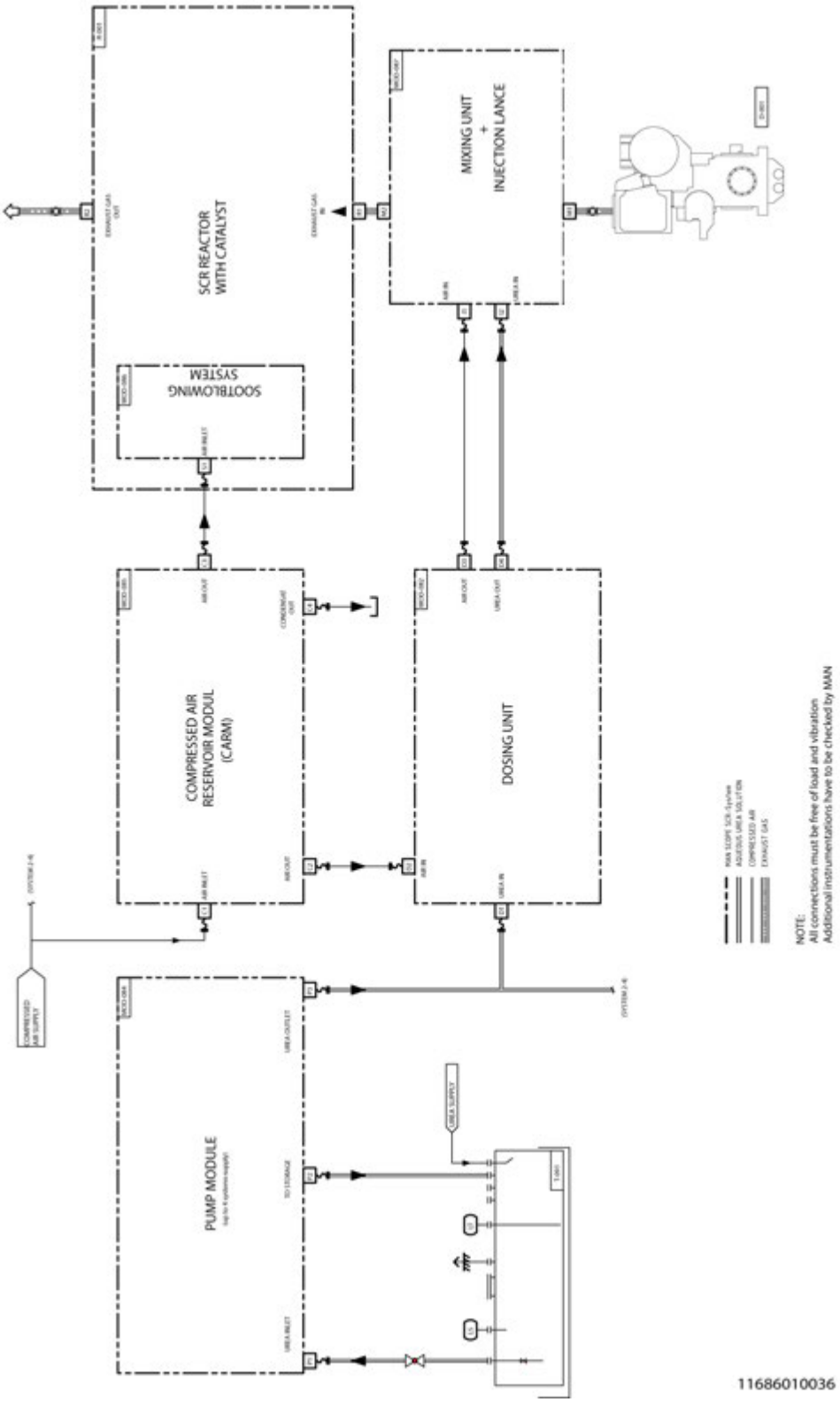

Figure 5: PFD SCR system

Urea pipes (for SCR only)

Galvanised steel pipe, brass and copper components must not be used for the piping of the system.

Proposed material (EN)

X6CrNiMoTi17-12-2

Installation of the SCR system

All modules are check regarding pressure and tightness.

Catalyst elements

For handling the catalyst elements sufficient space and supply tracks have to be foreseen. Depending on the amount of catalyst elements transport devices like carriages, pulleys, fork lifter or elevators are required.

Reactor and soot blowing system

A service space of recommended 800 mm in front of the inspection doors of the reactor for mounting and dismounting the catalyst elements has to be foreseen. Further 750 mm space for service and maintenance of the soot blower equipment and the differential pressure device has to be considered according the installation side of the soot blowing system.

Reactor and piping

In case of a bend before the reactor inlet, a straight inlet duct to the reactor of 0.5 times exhaust gas pipe diameter and a bend radius of 1.5 times exhaust gas pipe diameters has to be considered.

Mixing unit

The mixing unit is designed for vertical or horizontal installation. Bend on the downstream side has to be in accordance to above mentioned “Reactor and Piping”. Upstream of the mixing unit a bend can be installed according the MAN Energy Solutions requirements mentioned on the planning drawing.

Recommendations

All parts mentioned in this paragraph are not MAN Energy Solutions scope of supply.

Piping in general

All piping's have to be in accordance with *descriptions P 69 00 0, 3700402-0, "Pipeline treatment requirements for piping manufacture" and 010.000.001-01, "Operating Fluid Systems, flushing and cleaning"*.
Piping for fluids shall be mounted in an increasing/decreasing way. Siphons should be avoided, drainage system be foreseen.

Exhaust gas piping

The complete inside wall of the exhaust gas piping between engine outlet and SCR reactor inlet should not be coated by any protection material. Poisoning of the catalyst honeycombs could occur.

Preferred materials

All materials used for the construction of tanks and containers including tubes, valves and fittings for storage, transportation and handling must be compatible with urea 40 % solution to avoid any contamination of urea and corrosion of device used. In order to guarantee the urea quality the following materials for tank, pipes and fittings are compatible: Stainless steel (1.4301 or 1.4509) or urea-resistant plastics (e.g. PA12). For gaskets EPDM or HNBR. Piping for compressed air see section Specification of materials for piping.

Unsuitable materials

Unsuitable materials for tank, pipes and fittings are among others: Aluminum, unalloyed steel, galvanised steel, copper and brass.

In case incompatible material is used, clogging of urea filter inside the pump module may occur, or even worse, the catalyst elements may be damaged by catalyst poisons derived from this material. In this case, exchanging the catalyst modules may be necessary.

Urea tank

Store this material in cool, dry, well-ventilated areas. Do not store at temperatures below 10 °C and above 55 °C. The storage capacity of the urea tank should be designed depending on ship load profile and bunker cycle.

2025-03-13 - en

The urea supply line should be provided with a strainer and a non-return valve in order to assure a correct performance for the suction of the urea pump, which is installed downstream the tank. A level switch with the possibility to read out the signal will protect the pump of a dry run. A return line from the urea pump module over a pressure relief valve is entering the tank.

Urea solution quality

Use of good quality urea is essential for the operation of an SCR catalyst. Using urea not complying with the specification below e.g. agricultural urea, can either cause direct operational problems or long term problems like deactivation of the catalyst. For quality requirements, see section Specification of urea solution.

Insulation

The quality of the insulation has to be in accordance with the safety requirements. All insulations for service and maintenance spaces have to be dismountable. The delivered modules have no fixations, if fixations are necessary take care about the permissible material combination. Regarding max. permissible thermal loss see section Boundary conditions for SCR operation.

Water trap

Water entry into the reactor housing must be avoided, as this can cause damage and clogging of the catalyst. Therefore a water trap has to be installed, if the exhaust pipe downstream of the SCR reactor is facing upwards.

2025-03-13 - en

Engine room planning

Exhaust gas ducting

Example: Ducting arrangement

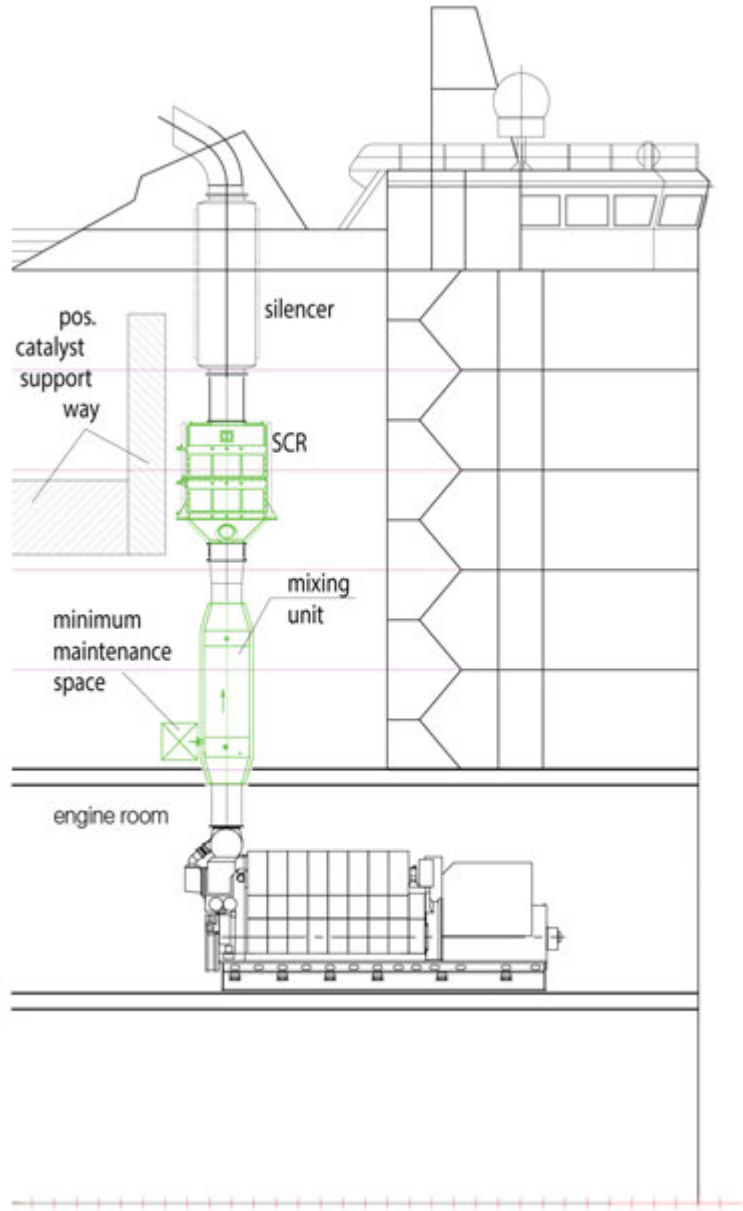

Figure 6: Example: Exhaust gas ducting arrangement

General details for Tier III SCR system duct arrangement

MAN Energy Solutions recommends that the SCR reactor housing should be mounted before all other components (e.g. boiler, silencer) in the exhaust duct, coming from the engine side. A painting on the inside wall of the exhaust duct in front of the the SCR system is not allowed.

All of the spaces/openings for cleaning and maintenance on the entire unit, including air reservoir module, dosing unit and reactor housing with soot-blowers must be accessible.

2025-03-13 - en

We strongly recommend that in front of the reactor housing sufficient space for the maintenance personal and/or for the temporary storage of the catalyst honeycombs has to be foreseen (see section SCR System).

Catalyst elements could reach a weight of 25 kg, the reactor openings could reach a total weight of about 70 kg, MAN Energy Solutions strongly recommends a lifting capability above the reactors.

A very important point is the transportation way and storage space of the catalyst honeycombs within the funnel for supply of the SCR reactor during maintenance or catalyst refreshment, one reactor could contain more than 100 elements.

To avoid time-consuming or implementation of a scaffolding, MAN Energy Solutions strongly recommends at minimum a lifting device in the funnel or any kind of material elevator. A porthole from outside rooms on level with the reactor housing is also a possibility, as far as those rooms could be supplied with the catalyst honeycombs.

2025-03-13 - en

Equipment to optimize performance

Overview

MAN Energy Solutions four-stroke Diesel engines and turbochargers are designed in accordance with specifications so that optimum results, e.g. fuel consumption and emissions performance, are obtained through the services normally provided. However, it is possible that specific operating situations could be managed more effectively using additional or alternative equipment.

Equipment used to adapt the engine to specific operating conditions or to optimise its performance is listed in Table 1. The ideal areas of application are also stated in this table. The purpose of table is to provide you with an overview of the options available and the circumstances in which they should be used.

Equipment/Measure	Propulsion	GenSet
Blow off charge air	X	X
Bypass charge air	X	X
Charge air preheating – via H.T./L.T. switch-over (2-stage charge air cooler)	X	X
Blow off exhaust gas (Waste gate)	X	X
Accelerate turbocharger (Jet assist)	X	X
Compressor by-pass	X	
X = Availability		

Table 1: Equipment for optimising the operating behaviour

Brief description

Charge air blow off or compressor by-pass

Blow-off charge air pressure used for:

- Reduction of charge air pressure/max. pressure at cold ambient conditions.
- Prevent surging at cold ambient conditions.
- Control of max. pressure at "Part Load Optimised" operation.
- Control of exhaust gas temperature for SCR operation.

When operating engines under full load at a low intake temperature (≤ 5°C) there is a danger, due to the high air density, that the charge pressure, and therefore the ignition pressure, increases excessively. In order to avoid such conditions, excess charge air in front of or after the charge air cooler is removed and released. In the first case, the charge air is blown off into the engine room and in the second case, when charge air released from the charge air cooler is hot, the charge air is blown off into atmosphere to prevent danger to persons and equipment. Alternatively, this hot charge air may be also used for inlet air preheating, called compressor by-pass.

Charge air by-pass

Charge air by-pass used for:

- EPROX GenSet version (variable speed DC)
- For "Fixed Pitch Propeller" operation on part load.

2025-03-13 - en

- For CPP (controled pitch propeller) operating in combinator mode on propeller curve.
- Increaseds charge air pressure and airflow.
- Decreases exhaust gas temperatures.
- Decreases smoke emission.

The charge air pipe is connected via a pipe with a smaller diameter and a bypass flap to the exhaust pipe. The flap is closed in normal operation. In the case of propeller operation (diesel-mechanical) at engine loads between 20% and 60% and at rated or reduced speed, the flap is opened to direct a part of the charge air into the exhaust pipe upstream of the turbine. The increased air flow of the turbine results in a higher charge air pressure of the compressor and consequently in improved operating behaviour of the engine. Additionally this flap may be used to prevent turbocharger pumping.

The throttle flap is controlled by a pneumatic actuator cylinder depending on the engine speed and the filling setting of the fuel delivery pumps.

Charge air preheating - 2-stage charge air cooler

Charge air preheating:

- For HFO low load operation (improves ignition delay).
- Increases charge air temperature (compression temperature).
- Decreases smoke emission.

Charge air preheating – via L.T. (low temperature) cut-out is used in the partial load range from 0 % to 40 % of engine load, to achieve the higher charge air temperature. Thereby an improved combustion is ensured and thus - conditionally reduced exhaust smoke.

Device for accelerating the jet assist

This equipment is used where special demands exist for rapid acceleration and/or load application. In such cases, the compressed air from the starting air cylinders is reduced to 4 bars (relative), directed to the compressor casing of the turbocharger and blown to the compressor wheel. In this way, additional air is supplied to the compressor which, in turn, is accelerated, thus increasing the charge air pressure. Operation of the accelerating system is activated by the control system, during start-up and load steps.

Waste gate (WG)

Exhaust gas waste gate used for:

- Control of max. pressure at "Part Load Optimised" operation.
- Control of exhaust gas temperature for SCR operation.

By blowing-off exhaust gas before the turbine, and its return to the exhaust pipe behind the turbine, exhaust gas pressure reduction at the turbocharger takes place and result in lower TC rpm and lower charge air pressure. This measure is necessary when the turbocharger is designed for an optimised partial-load operation. The WG result in higher exhaust temperatures which are used in connection with SCR after treatment of the exhaust gas.

2025-03-13 - en

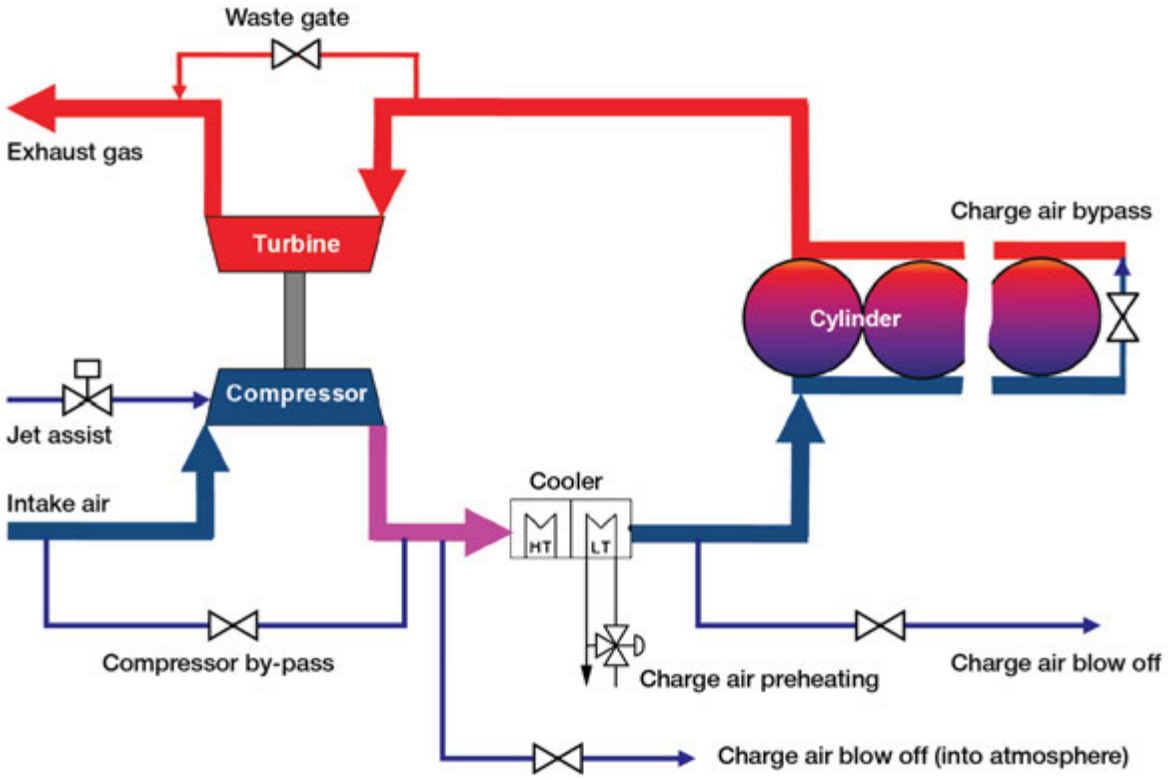

Figure 1: Overview of flaps

This page is intentionally left blank

Charge air blow off device

Design of the equipment

The device for blowing off charge air consists of the blow-off pipe on the charge air receiver, the blow-off "butterfly" valve (BOV) with silencer and its electro-pneumatic control system.

Brief description

Depending upon the operation conditions or climactic circumstances, (i.e. if the intake air is cold), the charge air pressure may become too high.
This situation requires a controlled pressure reduction by drawing air from the charge air pipe via the BOV.

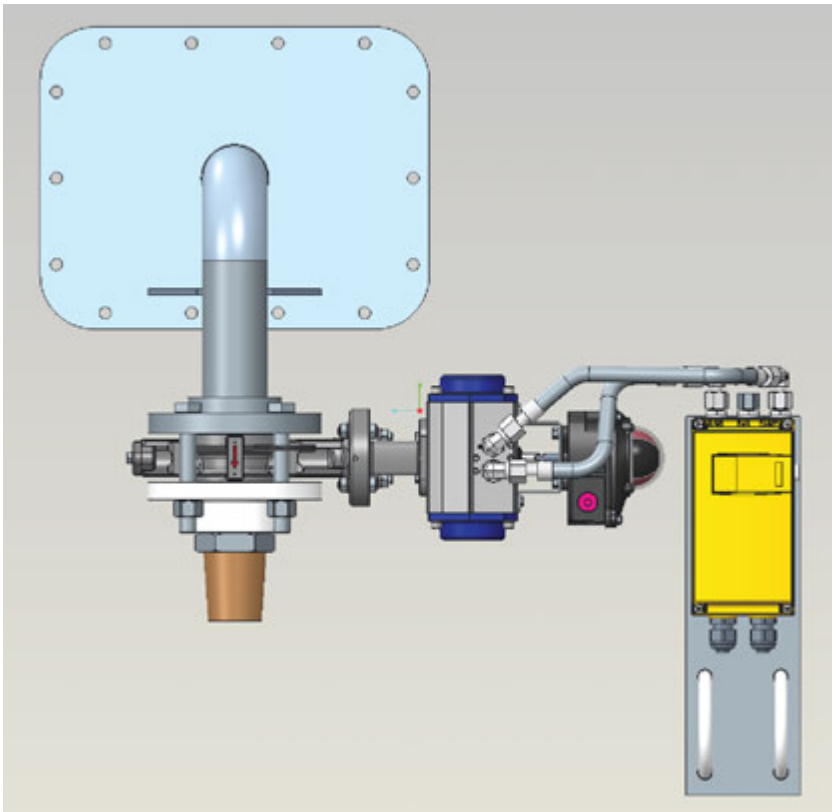

Principle of operation

The air supply for pneumatic drive of the valve is controlled by a modulating positioner. The charge air pressure and engine load serves as the criteria for the activation of the BOV. If the charge is less than the threshold value, the BOV remains closed. If the charge pressure is larger than the threshold value, and the engine load higher than the threshold value, the control system triggers the opening of the BOV, blowing part of the charge air off to the engine room, thus reducing the charge air pressure in the engine.

2019-03-21 - en

This page is intentionally left blank

2019-03-21 - en

Cleaning the turbocharger in service - turbine side

Description

High exhaust gas temperatures are often observed and claimed in service. High exhaust gas temperatures are normally caused by fouling on the turbine side of the turbocharger:

➢ Fouling turbine (coke deposit)

➪ Lower turbocharger performance

➪ Lower air flow / pressure through the engine

➪ Increasing exhaust gas temperatures

➪ Increasing fuel oil consumption

Fouling of the turbine and consequently higher exhaust gas temperature is influenced by: level of maintenance, condition of the fuel injection nozzles / fuel pumps, fuel oil quality and/or long-term low-load operation.

Smaller turbochargers are, due to area-relation in matching parts, more sensitive to coke deposit than larger turbochargers and consequently low power engines as L16/24 or L23/30H will need turbine cleaning more frequent than more powerful engines.

Turbine cleaning intervals must be expected to be following when operating on HFO:
"D-D" Dry-cleaning Daily Cleaning
"W-W" Wet-cleaning Weekly
Cleaning intervals can be shorter/longer based on operational experience. Regular performance observations will show the trend in charge air pressure, exhaust gas temperatures, and define the cleaning intervals for the turbine. However the turbine must be cleaned when exhaust gas temperature before turbine are about 20°C above the normal temperature (ISO corrected) (Sea trial).

Practical service experience have revealed that turbine side of turbocharger only can be sufficient cleaned by combination of nut-shell dry cleaning and water washing.

Dry cleaning of turbine side

This cleaning method employs cleaning agents consisting of dry solid bodies in the form of granules. A certain amount of these granules, depending on the turbocharger size, is, by means of compressed air, blown into the exhaust gas line before the gas inlet casing of the turbocharger.

The injection of granules is done by means of working air with a pressure of 5-7 bar.

On account of their hardness, particularly suited blasting agents such as nut-shells, broken or artificially shaped activated charcoal with a grain size of 1.0 mm to max. 1.5 mm should be used as cleaning agents.

The solid bodies have a mechanical cleaning effect which removes any deposits on nozzle vanes and turbine blades.

2025-03-13 - en

Dry cleaning can be executed at full engine load and does not require any subsequent operating period of the engine in order to dry out the exhaust system.

Cleaning system

The cleaning system consists of a cleaning agent container (2) with a capacity of approx. 0.5 liters and a removable cover. Furthermore the system consists of an air valve (3), a closing valve (1) and two snap on connectors.

The position numbers (2) and (3) indicate the system's "blow-gun". Only one "blow-gun" is used for each engine plant. The blow-gun is working according to the ejector principle with pressure air (working air) at 5-7 bar as driven medium. Injection time approx. 2 min. Air consumption approx. 5 Nm^3/2 min.

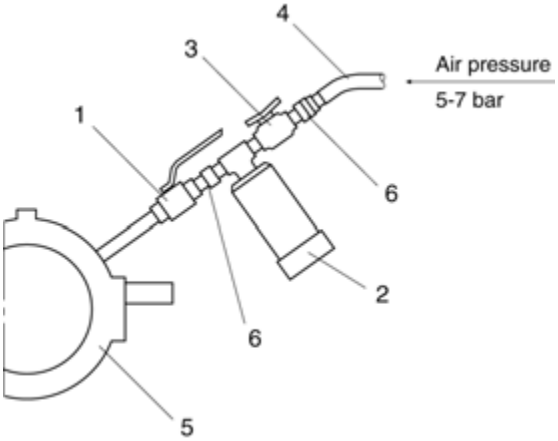

1 Closing valve
2 Container
3 Air valve
4 Working air inlet
5 Exhaust pipe
6 Snap coupling

Figure 1: Arrangement of dry cleaning of turbocharger - turbine

Water washing of turbine side

The water flow must be so high that all of the water do not evaporate. Also the waterflow must not be so high that the turbine wheel is drowned and stops rotating. The exhaust gas temperature before turbine and turbine speed must be adjusted in accordance with the below table.

Carry out sequential washing so that exhaust gas temperature after turbine drops below 100°C and in the drying period increases to more than 100°C.

The necessary water flow is depending on exhaust gas flow and temperature. The flow needed depends on the turbocharger size.

For preadjustment of the washing tool, check that the water flow is in accordance with the value in the below table. Open the water supply and adjust the water flow at the valve at the tool. Check in a bucket that the water flow is in the correct range.

Type	Flow rate of washing water l/min
TCR10	3
TCR12	5

2025-03-13 - en

Type	Flow rate of washing water l/min
TCR14	7.5
TCR16	7.5
TCR18	10
TCR20	13.5
TCR22	20
The max. permissible cleaning conditions: u_2 = 300 m/s T_{vT} = 320°C anc $P_{water\ max.}$ = approx. 3 bar	
u_2 = peripheral speed of the turbine rotor T_{vT} = exhaust gas temperature upstream of turbine $P_{water\ max.}$ = water pressure	

Table 1: Quantity of washing water for turbine cleaning

Experience has shown, that washing at regular intervals is essential to successful cleaning, as excessive fouling is thus avoided. Washing at intervals of 150 hours is therefore recommended. Depending on the fuel quality these intervals can be shorter or longer. However, the turbine must be washed at the latest when the exhaust gas temperature upstream of the turbine has risen about 20° C above the normal temperature.

Heavily contaminated turbines, which where not cleaned periodically from the very beginning or after an overhaul, cannot be cleaned by this method.

If vibration in the turbocharger occur after waterwashing has been carried out, the washing should be repeated. If unbalance still exists, this is presumably due to heavy fouling, and the engine must be stopped and the turbocharger dismantled and manually cleaned.

The cleaning effect is based on the water solubility of the deposits and on the mechanical action of the impinging water droplets and the water flow rate.

The washing water should be taken from the fresh water system and not from the fresh cooling water system or salt water system. No cleaning agents and solvents need to be added to the water.

To avoid corrosion during standstill, the engine must, upon completing of water washing run for at least 1 hour before stop to insure that all parts are dry.

Water washing arrangement / tool

New engines are as standard delivered with "water washing gun" as a part of standard tools for engines. The tool can be seen in figure 2 and is using the same connecting as the dry cleaning connection.

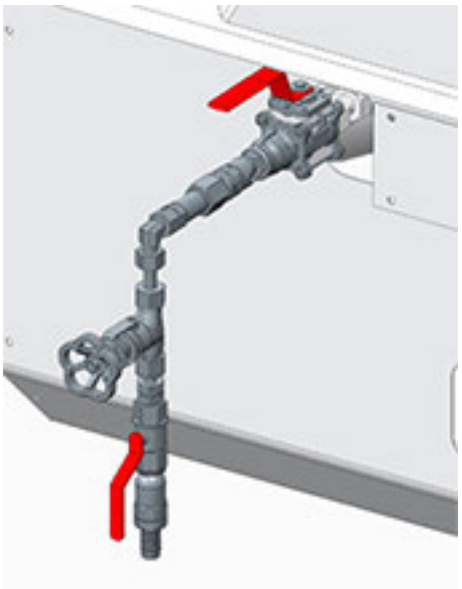

Figure 2: Maneuvering valve

The water for washing the turbine, is supplied from the external fresh water system through a flexible hose with couplings. The flexible hose must be disconnected after water washing.

By activating the maneuvering valve and the regulating valve the water is sprayed into the exhaust gas pipe before the turbine side of the turbocharger. See specific work card for water washing of turbine side. The water that is not evaporated is led out through a drain pipe in the exhaust gas outlet.

2025-03-13 - en

Position of gas outlet on turbocharger

Dimensions

5-6L23/30H (720-750 rpm)

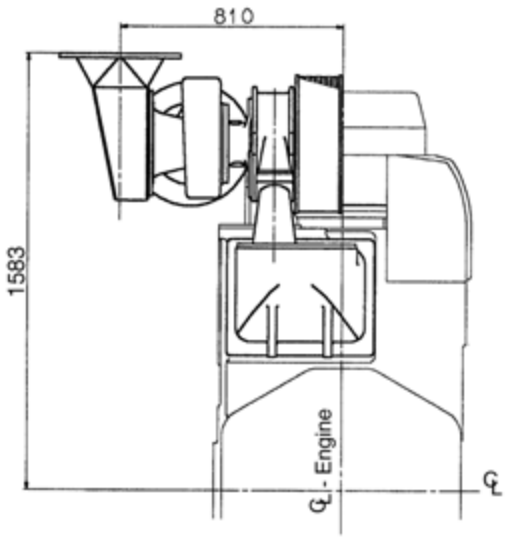

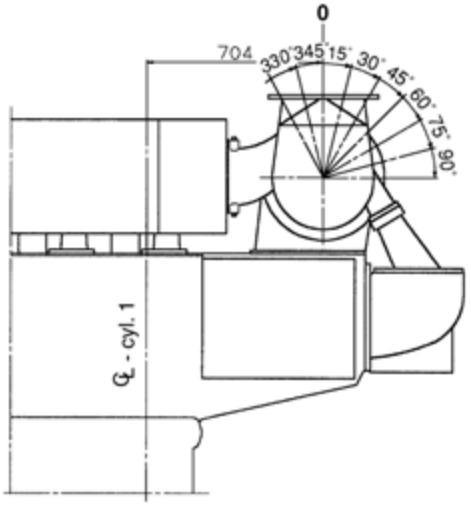

7-8L23/30H (720-750 rpm) - 6-7-8L23/30H (900 rpm)

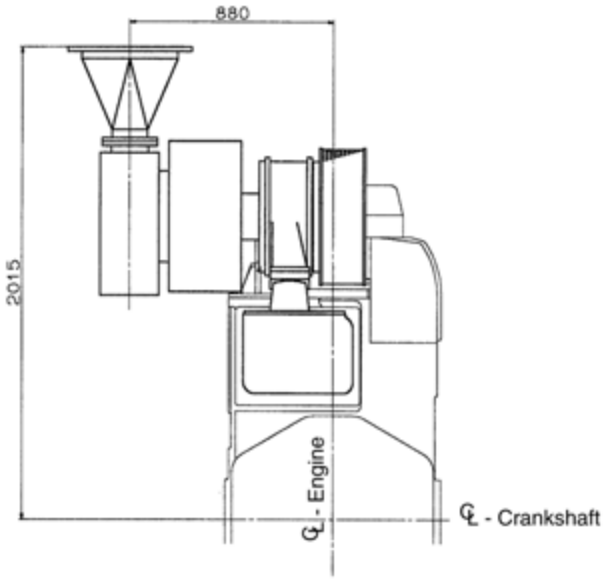

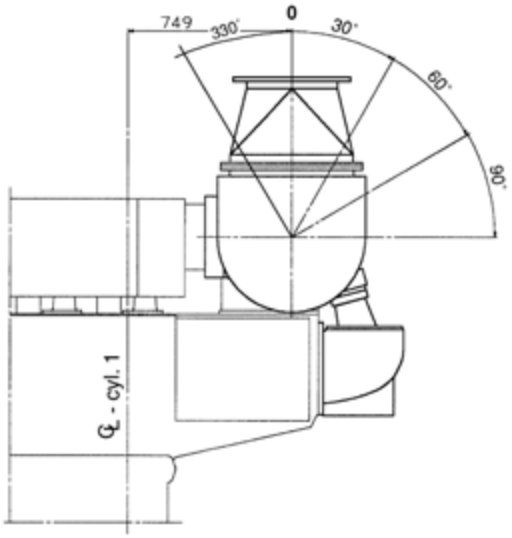

2012-10-16 - en

Flange

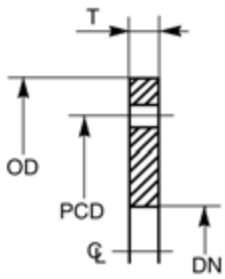

Exhaust flange D. mating dimensions						
Engine type	**DN (mm)**	**OD (mm)**	**T (mm)**	**PCD (mm)**	**Hole size (mm)**	**No of holes**
5-6L23/30H, 720/750 rpm	350	490	16	445	22	12
7-8L23/30H, 720/750 rpm 6L23/30H, 900 rpm	400	540	16	495	22	16
7-8L23/30H, 900 rpm	450	595	16	550	22	16

2012-10-16 - en

Starting of engine

General

NOTICE **Dual Fuel engines can only be started on MGO.**

The engine can be loaded according to the following procedure:

A: Normal start without pre-heated cooling water. Only on MDO/MGO.

B: Normal start with pre-heated cooling water. On MDO/MGO or HFO.

C: Stand-by engine. Emergency start, with pre-heated cooling water. On MDO/MGO or HFO pre-lubrication at intervals or continuous pre-lubrication.

The curves indicate the absolute shortest load-up time and we advise that loading up to 100% take some more minutes.

Starting on HFO

During shorter stops or if the engine is in a standby position on HFO, the engine must be pre-heated, and HFO viscosity must be in the range 12–18 cSt.

During pre-heating the jacket cooling water temperature must be kept as high as possible at least 60°C (± 5°C) either by cooling water from engines which are running or with a built-in pre-heater.

If the engine normally runs on HFO, pre-heated fuel must be circulated through the injection pumps while pre-heating the engine, although the engine just has run or has been flushed on MDO/MGO for a short period.

Starting on MDO/MGO

For starting on MDO/MGO, there are no restrictions except lubricating oil viscosity may not by higher than 1500 cSt. (5°C for SAE 30 or 10°C for SAE 40).

Initial ignition may be difficult if the engine and the ambient temperature are lower than 5°C and the cooling water temperature is lower than 15°C.

Prelubricating

The engine shall always be pre-lubricated 2 minutes prior to start if there is no pre-lubrication at intervals or continuous pre-lubrication installed.

Pre-lubrication at intervals is 2 minutes every 10 minutes.

2020-02-04 - en

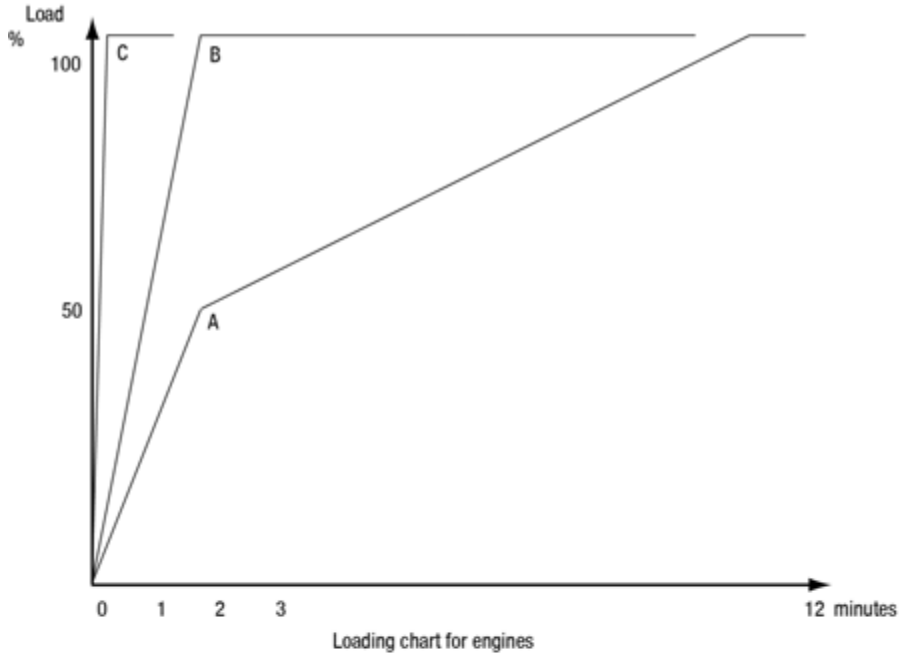

Loading chart for engines

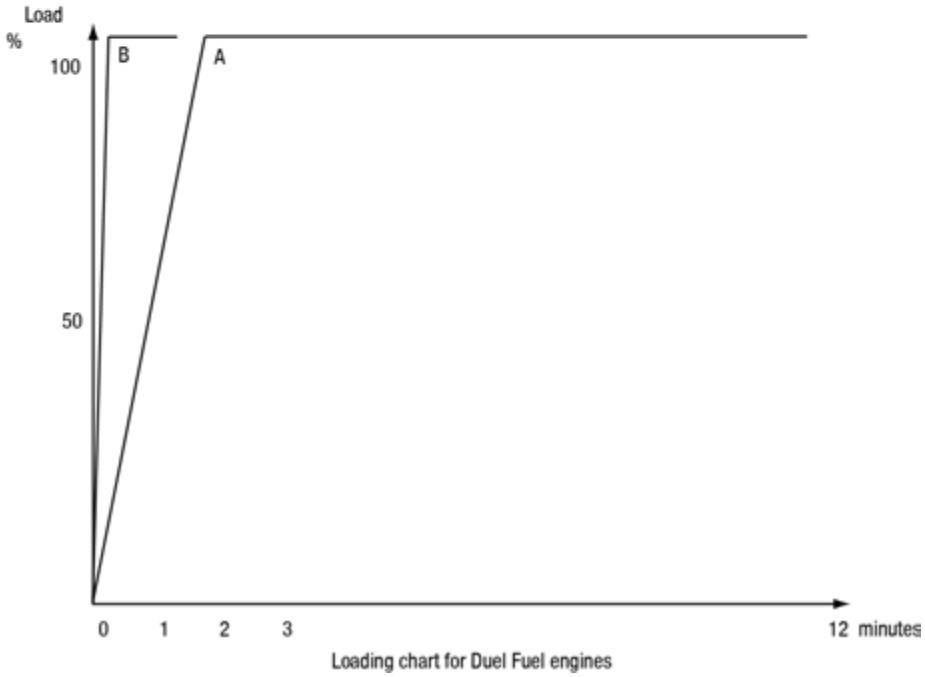

Loading chart for Duel Fuel engines

Figure 1: Loading chart

2020-02-04 - en

Governor

Governor type

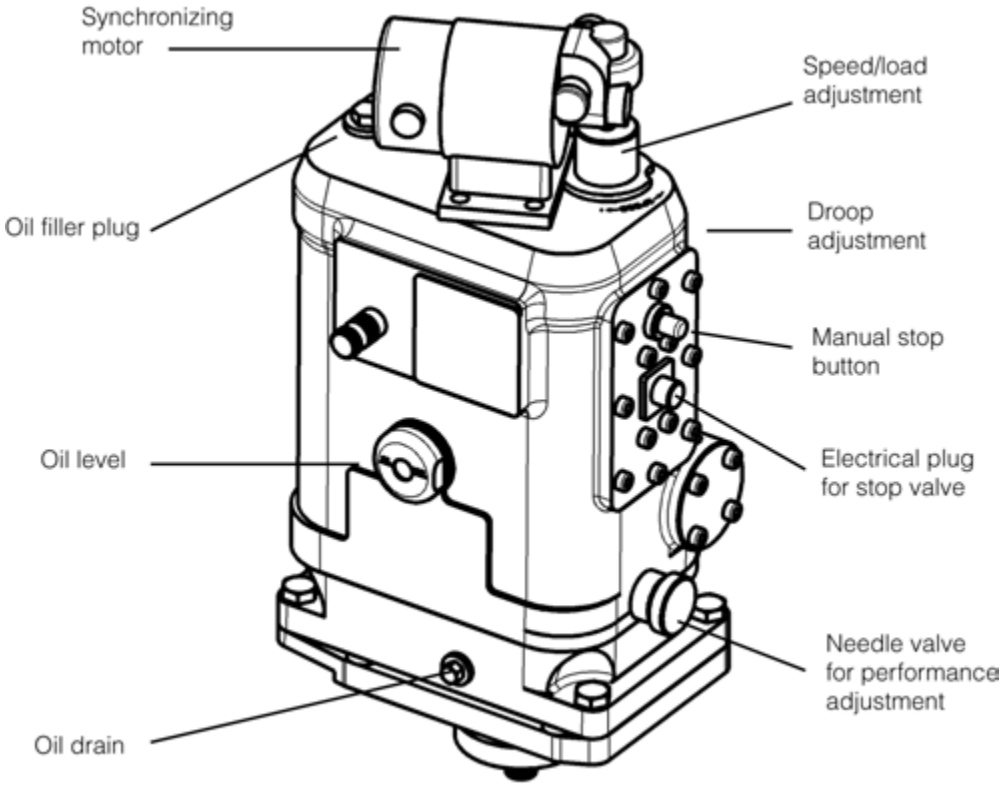

Figure 1: Regulateurs Europa governor.

The engines can be equipped with a hydraulic-mechanical governor, make Regulateurs Europa, type 1102.

Speed adjustment

Manual and electric.

Manual operated : Speed setting controlled by handwheel.

Electric motor : Permanent magnet synchronizing motor: 24V DC for raise and lower the speed.

Speed adjustment range

Between -5% and +10% of the nominal speed at idle running.

Droop

Adjustable by dial type lockable control from 0-10% droop.

Load distribution

By the droop setting.

2016-03-30 - en

Shutdown/Stop

Solenoid energised to "stop".

Manually operated shutdown button fitted on governor energised to "stop" only.

Stop Solenoid voltages: 24V DC.

2016-03-30 - en

Standard instrumentation

Description

One instrument panel consisting of:

Type	Code	Function
Pressure gauge	PI 01	LT Fresh water – inlet to air-cooler
Pressure gauge	PI 10	HT Fresh water – inlet engine
Pressure gauge	PI 21	Lubricating oil – inlet to filter
Pressure gauge	PI 22	Lubricating oil – outlet from filter
Pressure gauge	PI 23	Lubricating oil – inlet to turbocharger
Pressure gauge	PI 31	Charging air – outlet from cooler
Pressure gauge	PI 40	Fuel oil – inlet to engine
Pressure gauge	PI 50	Nozzle cooling oil – inlet to fuel valves

Instruments placed in start box:

Tachometer	SI 89/90	Turbocharger/engine – rpm
Switch for turbocharger/engine rpm		

Instrumentation mounted local on engine:

Thermometer	TI 01	LT water – inlet from air cooler
Thermometer	TI 02	LT water – outlet from air cooler
Thermometer	TI 03	LT water – oulet from lub. oil cooler
Thermometer	TI 10	HT fresh water – inlet to engine
Thermometer	TI 11	HT fresh water – outlet each cylinder
Thermometer	TI 20	Lubricating oil – inlet to cooler
Thermometer	TI 22	Lubricating oil – outlet from filter
Thermometer	TI 30	Charge air – inlet to cooler
Thermometer	TI 31	Charge air – outlet from cooler
Thermometer	TI 40	Fuel oil – inlet to engine

2012-09-28 - en

Thermometer (*)	TI 51	Nozz. cool. oil – outlet from fuel valves
Thermometer	TI 60	Exhaust gas – outlet each cylinder
Thermometer	TI 61	Exhaust gas – outlet turbocharger

(*) If nozzle cooiling oil is applied only.

2012-09-28 - en

Standard instrument panel

Main instrument panel

As standard the engine is equipped with an instrument panel, comprising instruments for visual indication of the most essential pressures. Illustrated on *fig. 1.*

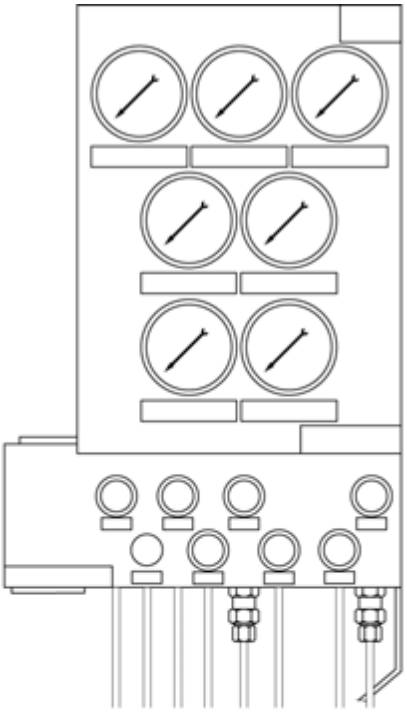

As standard an instrument panel is mounted on the engine.

The following incorporating pressure gauges for the most essential pressures.

Pressure gauge for:

PI 01	LT fresh water, inlet to air cooler
PI 10	HT fresh water, inlet engine
PI 21/22	Lubricating oil, inlet/outlet to filter
PI 23	Lub. oil, inlet to turbocharger
PI 31	Charge air, outlet from cooler
PI 40	Fuel oil, inlet to engine
PI 50	Nozz. cool. oil, inlet to fuel valves
	Switch for PI 21/22

Figure 1: Lay-out of instrument panel.

The instrument panel is mounted flexibly on rubber elements and all manometer connections are connected to the panel by means of flexible hoses, as shown on *fig. 2.*

2012-09-28 - en

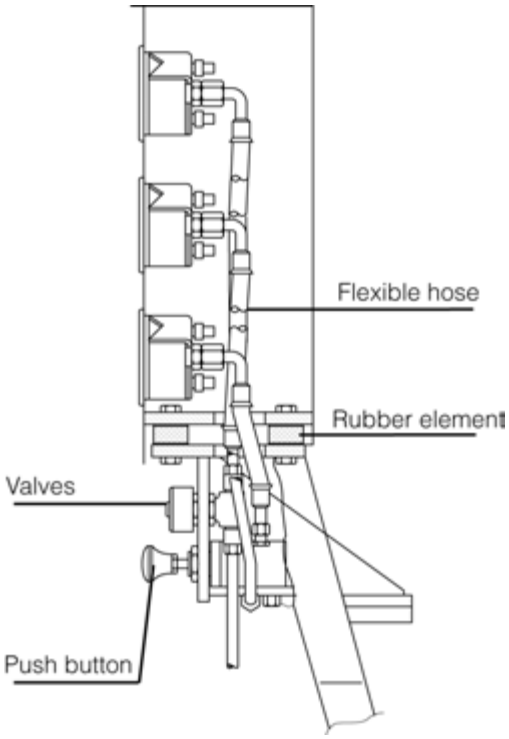

Figure 2: Cross section of instrument panel.

The connecting pipes to the manometers are equipped with valves which make it possible to replace the manometers during operation.

In the charging air and nozzle oil piping damping filters are inserted for levelling out pressure fluctuations.

2012-09-28 - en

Operation Data & Set Points

L23/30S, L23/30H

	Normal Value at Full load at ISO conditions		Acceptable value at shop test or after repair	Alarm Set point		Autostop of engine	
Lubricating Oil System							
Temp. before cooler (outlet engine) SAE 30 SAE 40	TI 20 TI 20	60-75° C 65-82° C	<75° C <82° C	TAH 20 TAH 20	90° C 100° C		
Temp. after cooler (inlet engine) SAE 30 SAE 40	TI 22 TI 22	45-65° C 50-72° C	<65° C <72° C	TAH 22 TAH 22	75° C 85° C	TSH 22 TSH 22	85° C 95° C
Pressure after filter (inlet eng)	PI 22	3.1-4.5 bar	>4.0 bar	PAL 22	3 bar	PSL 22	2.5 bar
Elevated pressure i.g. when centrifugal filter installed	PI 22	4.1-5 bar	>4.5 bar	PAL 22	3.5 bar	PSL 22	3.0 bar
Pressure drop across filter	PDAH 21-22	0.5-1 bar	<0.5 bar	PDAH 21-22	1.5 bar		
Prelubricating pressure				LAL 25	level switch		
Pressure inlet turbocharger	PI 23	1.3 - 1.7 bar			1.2 bar		
Lub. oil, level in base frame				LAL 28 LAH 28	low level high level		
Temp. main bearings	TE 29	75-85° C	<85° C	TAH 29	95° C		
Fuel Oil System							
Pressure after filter MDO HFO	PI 40 PI 40	2.5-5 bar 5-16 bar (A)		PAL 40 PAL 40	1.5 bar 4 bar		
Leaking oil				LAH 42	leakage		
Press. nozz. cool. oil, inlet eng. Temp. nozz. cool. oil, outlet eng.	PI 50 TI 51	1.5-3 bar 50-90° C		PAL 50	1.0 bar (B) 95° C (B)		
Cooling Water System							
Press. LT-system, inlet engine Press. HT-system, inlet engine	PI 01 PI 10	1-2.5 bar (D) 1.5-4.6 bar	>1.3 bar >1.8-<6 bar	PAL 01 PAL 10	0.4 bar + (C) 0.4 bar + (C)		
Temp. HT-system, inlet engine Temp. HT-system, outl. cyl.units	TI 10 TI 11	60-75° C 70-85° C	<85° C				
Temp. HT-system, outlet engine				TAH 12 TAH 12-2	90° C 93° C	TSH 12	95° C
Temp. raise across cyl. units		max. 10° C					
Exhaust Gas and Charge Air							
Exh. gas temp. before TC	TI 62 TI 62	425-475° C* 460-520° C**		TAH 62 TAH 62-2	550° C 600° C		
Exh. gas temp. outlet cyl.	TI 60 TI 60	300-415° C* 320-420° C**		TAH 60	450° C		
Diff. between individual cyl.			average ±25° C	TAD 60	average (F) ±50° C		
Exh. gas temp. after TC	TI 61 TI 61	290-370° C* 320-390° C**		TAH 61	500° C		
Ch. air press. after cooler	PI 31	2.0-2.5 bar 1.5-2.0 bar***					
Ch. air temp. after cooler	TI 31	35-55° C	<55° C	TAH 31	65° C		

Specific plants will not comprise alarm equipment and autostop for all parameters listed above. For specific plants additional parameters can be included. For remarks to some parameters, see overleaf.

* for 720/750 rpm ** for 900 rpm. *** for de-rated 105/110 kW/cyl. - 720/750 rpm.

10° C change in ambient temperature correspond to approx. 15° C exhaust gas temperature change

L23/30H, L23/30S

	Normal Value at Full load at ISO conditions		Acceptable value at shop test or after repair	Alarm Set point		Autostop of engine	
Compressed Air System							
Press. inlet engine	PI 70	7-9 bar	>7.5-<9 bar	PAL 70	7 bar		
Speed Control System							
Engine speed							
Mechanical							
Elec.	SI 90	720 rpm	820 rpm	SAH 81	815 rpm	SSH 81	825 rpm
Mechanical						SSH 81	815 rpm
Elec.	SI 90	750 rpm	855 rpm	SAH 81	850 rpm	SSH 81	860 rpm
Mechanical						SSH 81	850 rpm
Elec.	SI 90	900 rpm	1020 rpm	SAH 81	1015 rpm	SSH 81	1030 rpm
						SSH 81	1015 rpm
Turbocharger speed	SI 89	(G)		SAH 89	(E)		

Remarks to individual Parameters

A. Fuel Oil Pressure, HFO-operation

When operating on HFO, the system pressure must be sufficient to depress any tendency to gasification of the hot fuel.

The system pressure has to be adjusted according to the fuel oil preheating temperature.

B. Nozzle Cooling Oil System

The nozzle cooling oil system is only applied for Tier II marine and stationary engines.

C. Cooling Water Pressure, Alarm Set Points

As the system pressure in case of pump failure will depend on the height of the expansion tank above the engine, the alarm set point has to be adjusted to 0.4 bar plus the static pressure.

D. Press. LT -system, inlet engine (PI 01)

With two-string cooling water system the normal value can be higher, max. 4.0 bar.

E. Limits for Turbocharger Overspeed Alarm (SAH 89)

Engine type	720 rpm	750 rpm	900 rpm
5L23/30H	55,290	55,290	–
6L23/30H	55,290	55,290	42,680
7L23/30H	42,680	42,680	42,680
8L23/30H	42,680	42,680	42,680

F. Exhaust Gas Temperatures

The exhaust gas temperature deviation alarm is normally ±50° C with a delay of 1 min., but at start-up the delay is 5 min. Furthermore the deviation limit is ±100° C if the average temperature is below 200° C.

G. Turbocharger Speed

Normal value at full load of the turbocharger is dependent on engine type (cyl. no) and engine rpm. The value given is just a guide line. Actual values can be found in the acceptance test protocol.

Operation Data & Set Points

L23/30S, L23/30H

		Normal Value at Full load at ISO conditions		Acceptable value at shop test or after repair	Alarm Set point		Autostop of engine	
Lubricating Oil System								
Temp. before cooler (outlet engine)	SAE 30 SAE 40	TI 20 TI 20	60-75° C 65-82° C	<75° C <82° C	TAH 20 TAH 20	90° C 100° C		
Temp. after cooler (inlet engine)	SAE 30 SAE 40	TI 22 TI 22	45-65° C 50-72° C	<65° C <72° C	TAH 22 TAH 22	75° C 85° C	TSH 22 TSH 22	85° C 95° C
Pressure after filter (inlet eng)		PI 22	3.1-4.5 bar	>4.0 bar	PAL 22	3 bar	PSL 22	2.5 bar
Elevated pressure i.g. when centrifugal filter installed		PI 22	4.1-5 bar	>4.5 bar	PAL 22	3.5 bar	PSL 22	3.0 bar
Pressure drop across filter		PDAH 21-22	0.5-1 bar	<0.5 bar	PDAH 21-22	1.5 bar		
Prelubricating pressure					LAL 25	level switch		
Pressure inlet turbocharger		PI 23	1.3-1.7 bar			1.2 bar		
Lub. oil, level in base frame					LAL 28 LAH 28	low level high level		
Temp. main bearings		TE 29	75-85° C	<85° C	TAH 29	95° C		
Fuel Oil System								
Pressure after filter	MDO HFO	PI 40 PI 40	2.5-5 bar 5-16 bar (A)		PAL 40 PAL 40	1.5 bar 4 bar		
Leaking oil					LAH 42	leakage		
Press. nozz. cool. oil, inlet eng.		PI 50	3-5 bar		PAL 50	2.0 bar (B)		
Cooling Water System								
Press. LT-system, inlet engine Press. HT-system, inlet engine		PI 01 PI 10	1-2.5 bar (D) 1.5-4.6 bar	>1.3 bar >1.8-<6 bar	PAL 01 PAL 10	0.4 bar + (C) 0.4 bar + (C)		
Temp. HT-system, inlet engine Temp. HT-system, outl. cyl.units		TI 10 TI 11	60-75° C 70-85° C	<85° C				
Temp. HT-system, outlet engine					TAH 12 TAH 12-2	90° C 93° C	TSH 12	95° C
Temp. raise across cyl. units			max. 10° C					
Exhaust Gas and Charge Air								
Exh. gas temp. before TC		TI 62 TI 62	425-475° C* 460-520° C**		TAH 62 TAH 62-2	550° C 600° C		
Exh. gas temp. outlet cyl.		TI 60 TI 60	300-415° C* 320-420° C**		TAH 60	450° C		
Diff. between individual cyl.				average ±25° C	TAD 60	average (F) ±50° C		
Exh. gas temp. after TC		TI 61 TI 61	290-370° C* 320-390° C**		TAH 61	500° C		
Ch. air press. after cooler		PI 31	2.0-2.5 bar 1.5-2.0 bar***					
Ch. air temp. after cooler		TI 31	35-55° C	<55° C	TAH 31	65° C		

Specific plants will not comprise alarm equipment and autostop for all parameters listed above. For specific plants additional parameters can be included. For remarks to some parameters, see overleaf.

* for 720/750 rpm ** for 900 rpm. *** for de-rated 105/110 kW/cyl. - 720/750 rpm.

10° C change in ambient temperature correspond to approx. 15° C exhaust gas temperature change

L23/30H, L23/30S

	Normal Value at Full load at ISO conditions		Acceptable value at shop test or after repair	Alarm Set point		Autostop of engine	
Compressed Air System							
Press. inlet engine	PI 70	7-9 bar	>7.5-<9 bar	PAL 70	7 bar		
Speed Control System							
Engine speed							
Mechanical							
Elec.	SI 90	720 rpm	820 rpm	SAH 81	815 rpm		
Mechanical						SSH 81	825 rpm
Elec.	SI 90	750 rpm	855 rpm	SAH 81	850 rpm	SSH 81	815 rpm
Mechanical						SSH 81	860 rpm
Elec.	SI 90	900 rpm	1020 rpm	SAH 81	1015 rpm	SSH 81	850 rpm
						SSH 81	1030 rpm
Turbocharger speed	SI 89	(G)		SAH 89	(E)	SSH 81	1015 rpm

Remarks to individual Parameters

A. Fuel Oil Pressure, HFO-operation

When operating on HFO, the system pressure must be sufficient to depress any tendency to gasification of the hot fuel.

The system pressure has to be adjusted according to the fuel oil preheating temperature.

B. Nozzle Cooling Oil System

The nozzle cooling oil system is only applied for Tier II marine and stationary engines.

C. Cooling Water Pressure, Alarm Set Points

As the system pressure in case of pump failure will depend on the height of the expansion tank above the engine, the alarm set point has to be adjusted to 0.4 bar plus the static pressure.

D. Press. LT -system, inlet engine (PI 01)

With two-string cooling water system the normal value can be higher, max. 4.0 bar.

E. Limits for Turbocharger Overspeed Alarm (SAH 89)

Engine type	720 rpm	750 rpm	900 rpm
5L23/30H	55,290	55,290	–
6L23/30H	55,290	55,290	42,680
7L23/30H	42,680	42,680	42,680
8L23/30H	42,680	42,680	42,680

F. Exhaust Gas Temperatures

The exhaust gas temperature deviation alarm is normally ±50° C with a delay of 1 min., but at start-up the delay is 5 min. Furthermore the deviation limit is ±100° C if the average temperature is below 200° C.

G. Turbocharger Speed

Normal value at full load of the turbocharger is dependent on engine type (cyl. no) and engine rpm. The value given is just a guide line. Actual values can be found in the acceptance test protocol.

Power supply and distribution

Power supply and distribution

The plant has to provide electric power for the automation and monitoring system. In general an uninterrupted 24 V DC power supply is required for SaCoSone.

For marine main engines, an uninterrupted power supply (UPS) is required which must be provided by two individual supply networks. According to classification requirements it must be designed to guarantee the power supply to the connected systems for a sufficiently long period if both supply networks fail.

Galvanic isolation

A fault in an IT mains (see IEC 60364-1) affects the entire galvanic island formed by the IT network. If different engines are fed from galvanically connected power supplies, then a fault in one of the engines can also affect all other engines. It is therefore the subject of the system risk assessment to determine whether engines may be galvanically connected to each other. It is strongly recommended not to supply multiple engines from galvanically connected power supplies in order to limit the impact of errors and facilitate troubleshooting. For the same reason, the power supplies of the engines must be galvanically isolated from the power supplies for other parts of the system.

2025-10-08 - en

This page is intentionally left blank

Cybersecurity guidelines

Cybersecurity guidelines

Terms, abbreviations and definitions

Term, abbreviation	Definition
IM	Injection module
DM	Display module
LOP	Local operating panel
CM-S	Control module small (Note: A CM can also be used instead of the CM-S in some architectures. In this document, the designation CM-S is used to represent both modules)
SCR	Selective catalytic reduction
IAS	Integrated alarm system (see also “customer network”)
PMS	Power management system
SDI	SaCoSone device image
EXPERT	Everllence tool for SaCoS parameterisation
ER	Engine room
ECR	Engine control room
SaCoSone	Safety and control system on engine
CU	Control unit
eToken	SaCoSone security token (Thales Group eToken 5110+)

Table 1: Terms, abbreviations, and definitions

System Overview

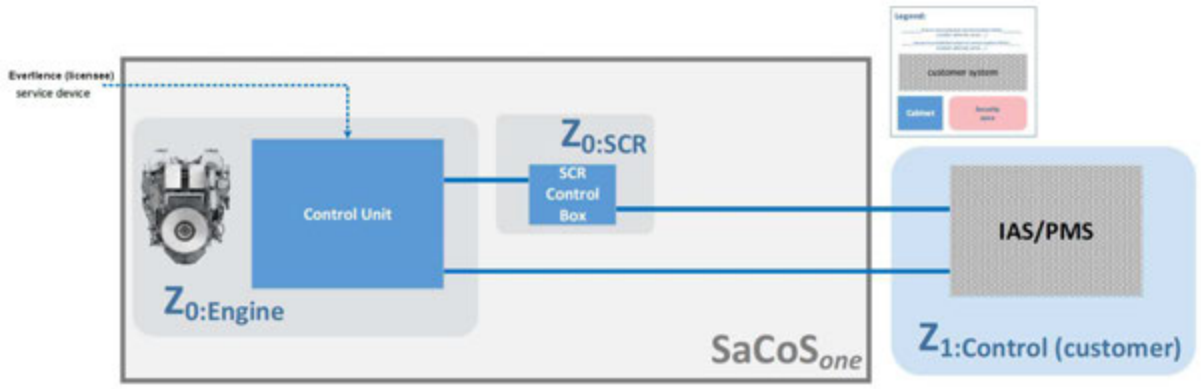

Figure 1: SaCoSone small-bore genset: Zones and connections (simplified)

2025-10-06 - en

Figure *SaCoSone small-bore genset: Zones and connections (simplified)*:
Shows a simplified overview of the SaCoSone system (small-bore genset variant), as well as all zones and connections relevant for the cyber security analysis.

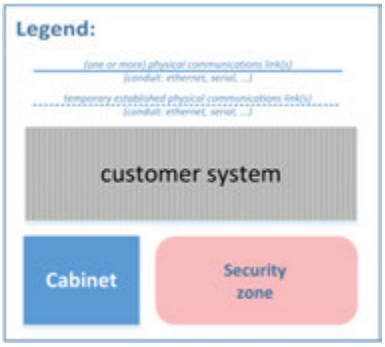

Figure 2: SaCoSone small-bore genset: Zones and connections (simplified) – Legend

Figure *SaCoSone small-bore genset: Zones and connections (simplified) – Legend*:
Shows the legend for the simplified overview of the SaCoSone system (small-bore genset variant).

The system is divided into the following main security zones:

- $Z_{0:Engine}$: Devices in this zone implement the main functionality of the engine control system
- $Z_{0:SCR}$: Devices in this zone implement the SCR functionality and enable local monitoring and control of the SCR system.
- $Z_{1:Control\ (customer)}$: This zone contains the ship's integrated alarm and/or power management system(s) (IAS/PMS)

The majority of the devices making up the control system are installed in locked control cabinets or units. These must be installed in restricted access areas such as engine rooms (ER) or engine control rooms (ECR).

Devices or systems that are not part of the system under consideration but are connected to it via hardwiring are the responsibility of the integrator and must meet the relevant requirements such as IACS UR E27.

Physical security of SaCoS

The control system's devices and communication links must be physically protected against unauthorised access at all times (i.e. including during commissioning), for example by installing them in restricted access areas such as engine rooms (ER). Access to the control system must be logged.

The operator/integrator is responsible for assessing the security level of these protective measures; the system context, system purpose, system location, assumptions about actual and future threats to the operator's business operations, and applicable regulations should be taken into account.

Secure access and storage of SaCoS data

It is necessary to keep the data created by or for SaCoS secure and protected against access by third parties.

2025-10-06 - en

Securing Z1:Control(Customer)

$Z_{1:Control(Customer)}$ must be a trusted network in the sense of IACS UR E27.

A compromised SaCoS can also pose a threat to customer networks and devices by infecting/compromising the customer systems within them. The operator/integrator can implement additional measures such as installing additional network security devices to protect against this threat.

Maintaining network segmentation

Network segmentation is one of SaCoS's key protection measures. Therefore, the network structure set up by Everllence must not be changed.

Specifically, the following guidelines should be adhered to:

- Individual network segments must not be bridged.
- No additional devices may be connected to the SaCoS network segments. This does not apply to temporary connections for proper commissioning or service purposes (e.g. loading new control unit software) using suitable tools. The tools used must meet general cybersecurity requirements and, in particular, the applicable requirements of the relevant standards (e.g. IACS UR E27). The user is responsible for proper use. Only devices managed by the user's respective IT organisation (operator, integrator, service, manufacturer, ...) may be used.

Preparation for security incidents

Residual risks may remain even if the present guidelines are followed. The operator should prepare for possible security incidents in order to be able to react to them promptly. This includes the creation of an *incident response plan*, which should address the following points, among others:

- Obtain spare parts to replace SaCoSone modules that have failed or been compromised due to an attack.
- If changes are made to the system (e.g. parameterisation of the system), these changes should be saved accordingly.
- Report the security incident to the engine manufacturer's 1st level support via a secure channel and follow the instructions.
- Save all relevant data for all causes (may require assistance from the engine manufacturer's 1st level support). This includes, but is not limited to, the access logs and general audit logs generated by the customer devices and the plant.
- Analyse the data and take steps to address the vulnerability that led to the incident.

The operator is also instructed to monitor the system for indications of a possible security incident as far as possible.

Secure disposal

The operator is responsible for the security of potentially sensitive data when disposing of the devices.

User account management

The operator and service personnel are responsible for managing the access data for SaCoS devices.

2025-10-06 - en

Security Incident Report

Security incidents affecting SaCoSone shall be reported to the engine manufacturer's 1st level support.

2025-10-06 - en

Mechanical overspeed

Mechanical overspeed

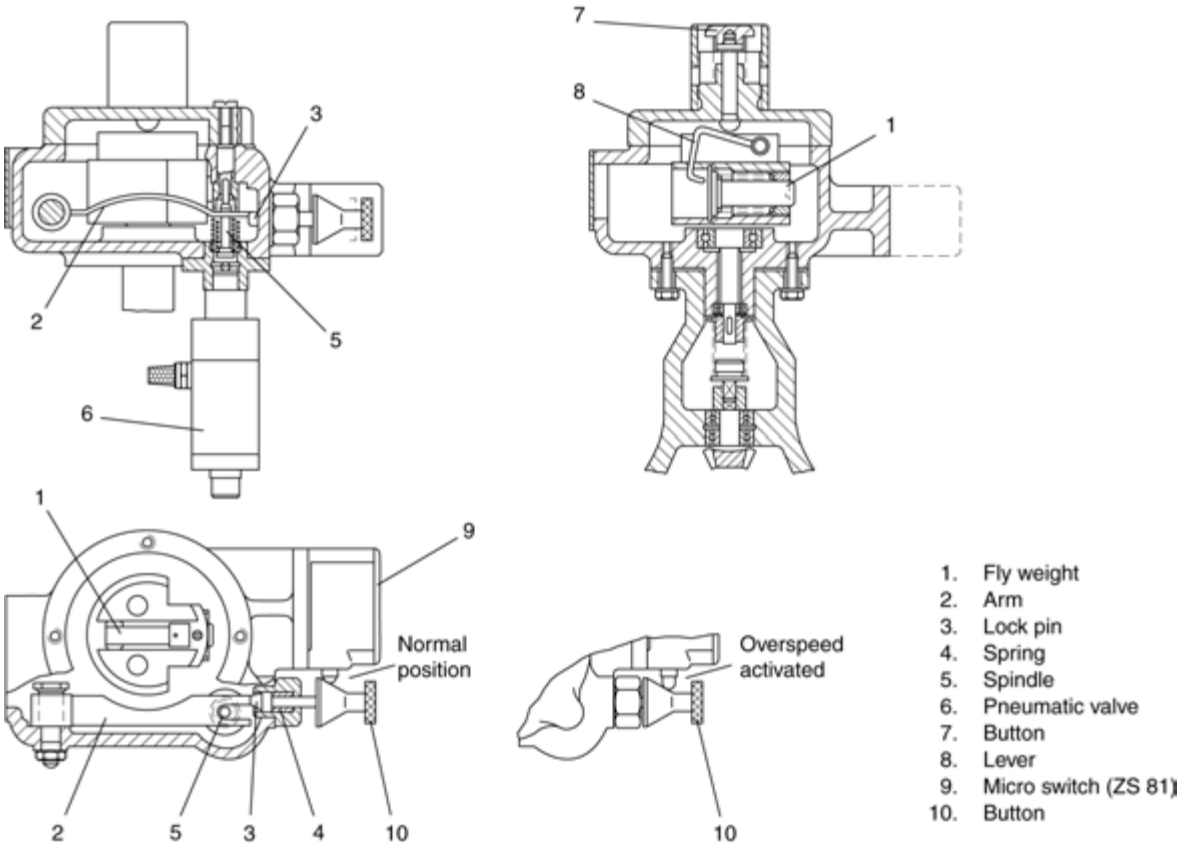

Figure 1: Mechanical overspeed.

The engine is protected against overspeeding in the event of, for instance, governor failure by means of an overspeed trip.

The engine is equipped with a stopping device which starts to operate if the maximum permissible revolution number is exceeded.

The overspeed tripping device is fitted to the end cover of the lubricating oil pump and is driven through this pump.

If the pre-set tripping speed is exceeded, the springloaded fly weight (1), *see fig 1,* will move outwards and press down the arm (2).

The arm is locked in its bottom position by the lock pin (3) which is pressed in by the spring (4).

At the same time the arm (2) presses down the spindle (5), and the pneumatic valve (6) opens, whereby compressed air will be led to the stop cylinder, *(see also B 17 30 1)* in which the piston is pressed forward and, through the arm, turns the fuel pump regulating shaft to STOP position. Thereby the engine stops, the spring-loaded pull rod connection to the governor being compressed.

The engine can be stopped manually by pressing down the button (7), which will activate the springloaded fly weight (1) through the lever (8).

2012-09-28 - en

If the overspeed has been activated, the overspeed must be reset before the engine can be started. Reset is done by means of the button (10).

Overspeed alarm (SAH 81)

The overspeed alarm (SAH 81) is activated by means of the micro switch (9).

2012-09-28 - en

Local starting box - No 1

Description

The starting box is mounted on the engine's control side. On front of the box there are the following indications/pushbuttons:

- Indication of engine or turbocharger RPM
- Indication of electronic overspeed
- Pushbutton for "Manual Start"
- Pushbutton for "Manual Stop"
- Pushbutton for "Remote" *
- Pushbutton for "Local" *
- Pushbutton for "Blocking" *
- Pushbutton for change-over between engine and turbocharger RPM

* The function chosen is indicated in the pushbutton. See fig. 1.

Manual start

The engine can be started by means of the start button, but only if the button "Local" is activated.

The manual, local start is an electrical, pneumatic start, i.e. when activating the start button a solenoid valve opens for air to the air starter, thereby engaging the starter and starting the diesel engine. Throughout the starting cycle the start button must be activated.

The air starter is automatically disengaged when the diesel engine exceeds 110 RPM. If the start button is disengaged before the diesel engine has exceeded 110 RPM, further starting cycles are blocked, until 5 sec. after the engine is at standstill.

Remote start

Remote start can only take place if the pushbutton for "Remote" is activated.

Manual stop

The "Manual Stop" button is connected to the stop coil on the governor.

Blocking

If "Blocking" is activated, it is not possible to start the diesel engine.

Engine / turbocharger RPM

By activating the "Engine RPM/TC RPM" button, the indication is changed.

Engine RPM indication is green light-emitting diodes and turbocharger RPM indication is red light-emitting diodes.

2014-11-17 - en

External indications

There are output signals for engine RPM and turbocharger RPM.

Engine	0 -	1200 RPM ~ 4-20 mA
TC	0 -	60000 RPM ~ 4-20 mA

The pushbuttons for "Remote", "Local" and "Blocking" have potential free switches for external indication.

All components in the starting box are wired to the built-on terminal box.

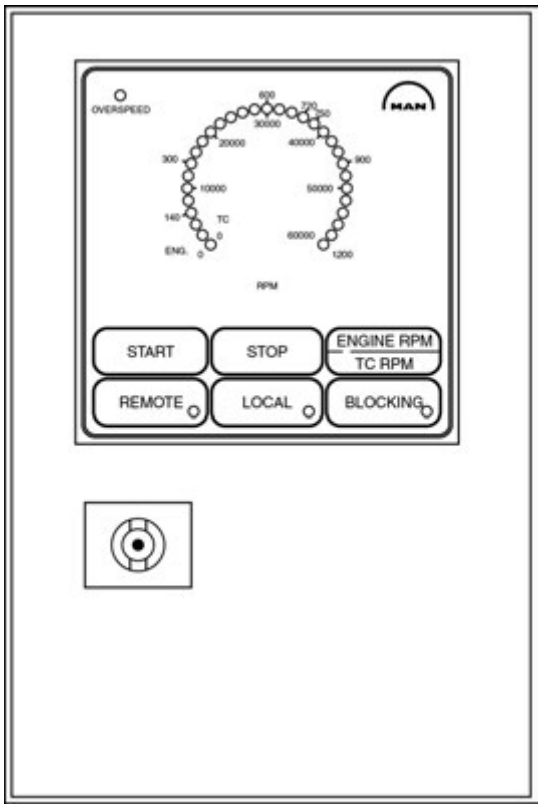

Figure 1: Starting box

2014-11-17 - en

Converter for engine RPM signal

Engine RPM signals

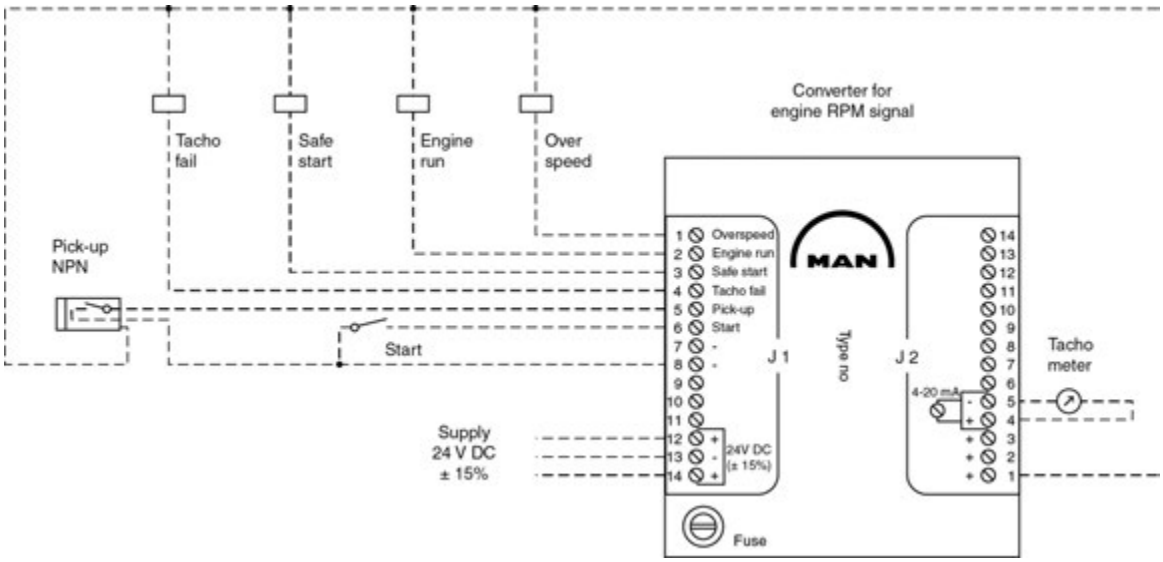

Figure 1: Converter for engine RPM

For measuring the engine's RPM, a pick-up mounted on the engine is used giving a frequency depending on the RPM. To be able to show the engine's RPM on an analogue tachometer, the frequency signal is sent through an f/I converter (frequency/current converter), where the signal is transformed into a proportional 4-20 mA ~ 0-1200 RPM.
Both tachometer on the engine and possibly external tachometers should be connected in the current loop.

Further, the converter has following signals :

- overspeed
- engine run
- safe start
- tacho fail

Overspeed

When the engine speed reach the set point for electronic overspeed the converter gives a shutdown signal and a alarm signal through a relay.

Engine run

When the engine speed reach 710 RPM the converter gives a "engine run" signal. The signal will also be given when the engine speed reach 200 RPM + 8 sec., (this is used for pump engines).

The engine run signal will be deactivated when the speed is 640 RPM. If the engine speed haven't been over 710 RPM the signal will be deactivated at 200 RPM.

2018-12-21 - en

The "engine run" signals will be given through a relay. One for synchronizing and one for start/stop of pre. lub. oil pump or alarm blocking at start/stop.

Safe start

When the safe start signal is activated the engine can start. When the engine reach app. 140 RPM the air starter will be shut-off.

Further, the safe start signal is a blocking function for the air starter during rotation.

Tacho fail

The tacho fail signal will be on when everything is normal. If the pick-up or the converter failed the signal will be deactivated. E.g. if there is power supply failure.

The converter for engine RPM signal is mounted in the terminal box on the engine.

Pick-up

The pick-up is a NPN-type with LED-indication. The sensing distance is 0.5 to 1.2 mm.

All wiring to relay, pick-up and tachometer are made by MAN Energy Solutions.

Data

Operating data	:	24 V DC ± 15%
Power consumption	:	3 Watt
Ambient temperature	:	-20° C to 70° C
Output current	:	4-20mA ~ 0-1200 RPM

2018-12-21 - en

Oil mist detector

Description

The oil mist detector type Tufmon from company Dr. Horn is option for all engine types. Standard on 7, 8 and 9L27/38.

The oil mist detector is based on direct measurement of the oil mist concentration in the natural flow from the crankcase to the atmosphere.

The detector is developed in close cooperation between the manufacturer Dr. Horn and us and it has been tested under realistic conditions at our testbed.

The oil mist sensor is mounted on the venting pipe together with the electronic board. At first the sensor will activate an alarm, and secondly the engine will be stopped, in case of critical oil mist concentration. Furthermore there is an alarm in case of sensor failure. To avoid false alarms direct heating of the optical sensor is implemented.

The installation is integrated on the engine. No extra piping/cabling is required.

Technical data

Power supply	: 24 V DC +30% / -25%
Power consumption	: 1 A
Operating temperature	: 0°C....+70°C

Enclosure according to DIN 40050:

Analyzer	: IP54
Speed fuel rack and optical sensors	: IP67
Supply box and connectors	: IP65

Figure 1: Oil mist detector.

2025-03-20 - en

This page is intentionally left blank

2025-03-20 - en

Engine control box no 1

The safety system

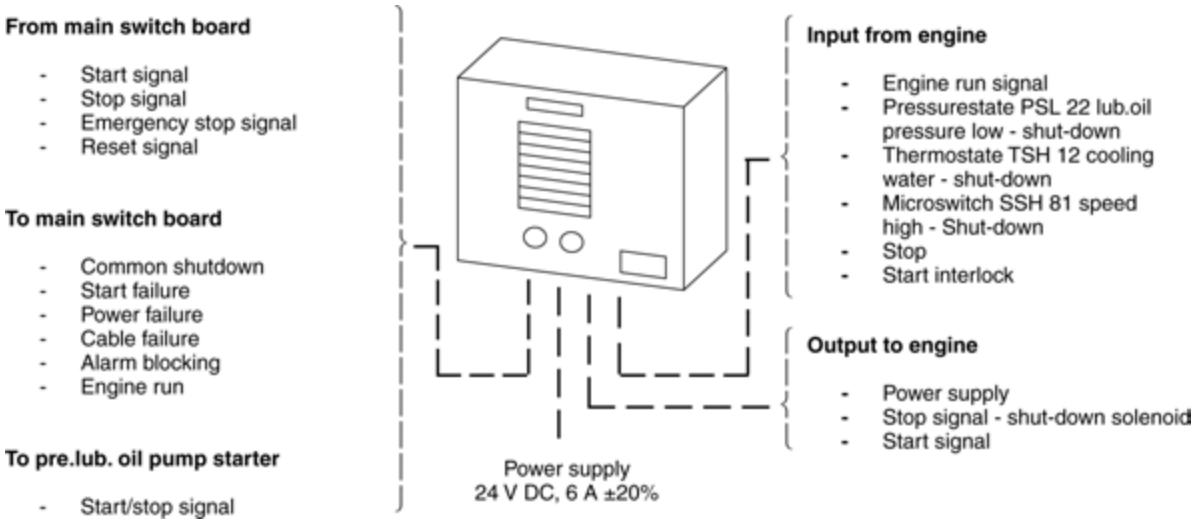

Figure 1: External connections to/from the engine control box.

The engine control box is watching the most important safety operating functions of the diesel engine, i.e. low lub. oil pressure, high cooling water temperature, and overspeed.

If an unintended condition occurs to one of the above functions, the engine control box will release automatic stop of the engine (shutdown).

In order to avoid an unintended re-starting after release of a shutdown, there is a built-in reset function which has to be activated before the engine can be re-started. Remote reset is also possible.

Besides, there are built-in start/stop procedures for the engine. On *fig. 1* the possible external connections and input/output signals are shown.

On the front cover of the engine control box there is an indication panel.

There are indications for:

- Power
- Lub. oil shutdown
- High temp. fresh water shutdown
- Overspeed shutdown
- Start failure
- Wire break
- Start interlocks

There are push buttons for:

- Start
- Stop
- Reset
- Lamp test

2012-09-28 - en

Alarm blocking

The engine control box is provided with a relay output for alarm blocking. It is advisable to use in case of too low lub. oil pressure, so that alarm is avoided during starting and stopping of the engines.

Start/stop of the diesel engine

As the engine control box can give the diesel engine a signal of normal start/stop, it is possible to mount remote switches for these functions.

If the diesel engine does not start during a starting trial, a potential free switch will give the information that there is a starting failure.

When the diesel engine is running, two relay outputs are activated. One of these switches can be used for start/stop of the prelubricating pump.

Engine control box cabinet

The engine control box cabinet can be installed in the engine room, near the engine, fig. 2 shows the dimensions of the cabinet. Enclosure: IP 55.

The engine control box can also be installed in the engine control room. It is possible to integrate the engine control box in the switch board.

The following is available as an option:

- One box for 3 engines
- Electronic overspeed
- Custom made solutions

2012-09-28 - en

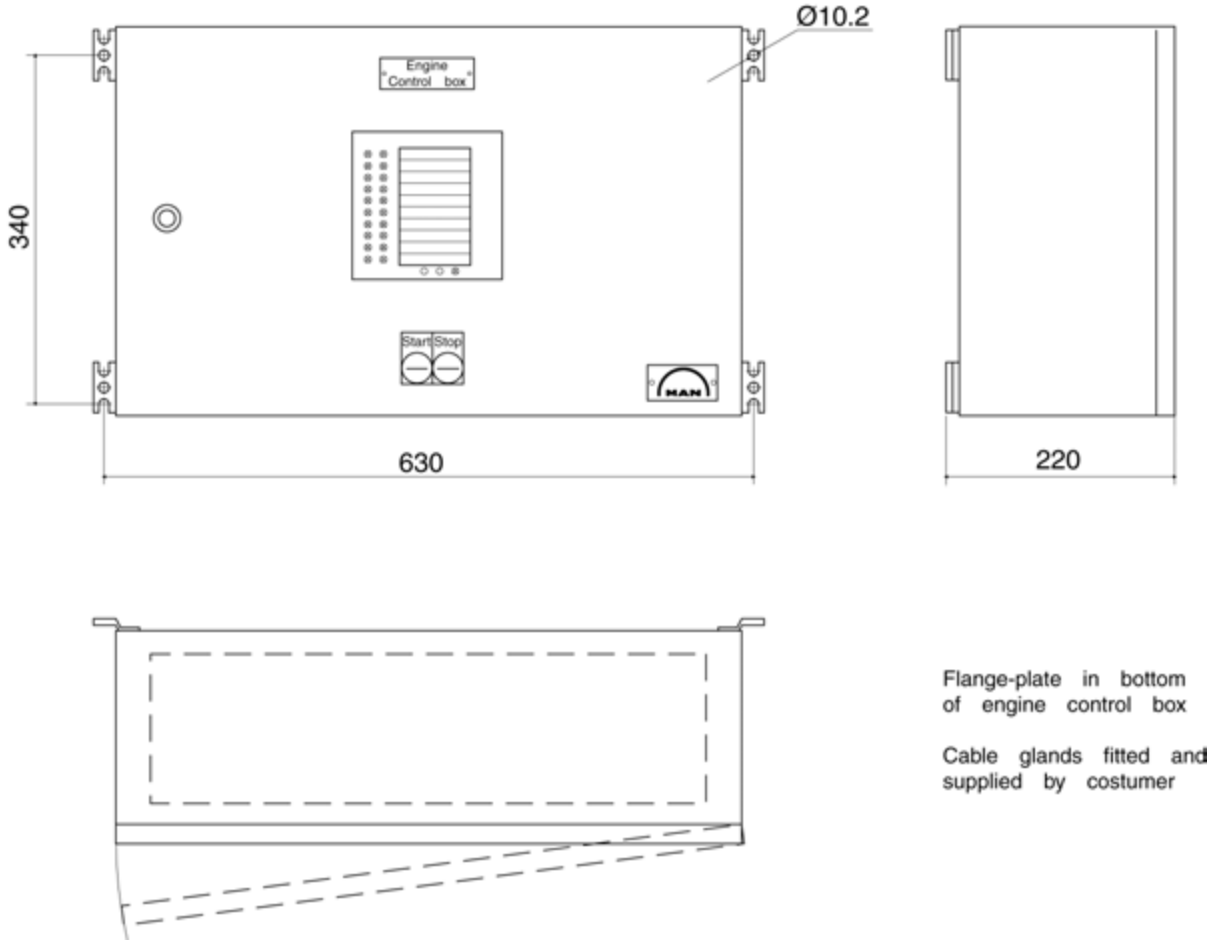

Figure 2: Engine control box.

2012-09-28 - en

This page is intentionally left blank

2012-09-28 - en

Engine control box no 2, safety- and alarm system

Alarm and safety system

The engine control box is watching all alarm and safety operating functions of the diesel engine.

In case of unintended conditions for the above functions, the engine control box will initiate:

- automatic stop of the engine (shutdown)

or

- a warning indication (alarm)

In order to avoid an unintended re-starting after release of a shutdown, there is a built-in reset function which has to be activated before the engine can be re-started. Remote reset is also possible.

Besides, there are built-in start/stop procedures for the engine.

On the front cover of the engine control box there are 3 indication panels. One for the safety system and two for the alarm system.

The engine control box will reflect the actual engine automation/instrumentation. The items below are general.

For the safety system there are indications for:

- Power on
- Engine run
- Lub. oil shutdown
- High temp. fresh water shutdown
- Overspeed shutdown
- Emergency shutdown
- Start failure
- Wire break
- Start interlock (blocking)
- Start interlock (local)
- Starting air

For the alarm system there are indications for:

- Lubricating oil inlet pressure
- Prelubricating oil pressure
- Fuel leakage
- Oil level base frame *
- Lub. oil filter
- Cooling water outlet temp.
- Lub. oil inlet temp.
- Cooling water press.
- Tacho failure
- Low supply voltage
- High supply voltage
- Alternator overheating

2013-12-02 - en

- Lambda control failure
- Fuse failure
- Pre. lub pump failure
- Overspeed
- Spare x 4

Furthermore there are push buttons for:

- Start of engine
- Stop of engine
- Reset
- Lamp test
- Diesel oil (MDO) mode with indication *
- Heavy fuel oil (HFO) mode with indication *

* Options

Alarm blocking

The engine control box is provided with a relay for alarm blocking, so that alarm is avoided during starting and stopping of the engine.

Start/stop of the diesel engine

The diesel engine can be started and stopped by means of push buttons on the panel. Furthermore, it is possible to mount remote switches for these functions.

If the diesel engine does not start during a starting trial, a potential free switch will give the information that there is a starting failure.

When the diesel engine is running, three relay outputs are activated. One is used for start/stop of the prelubricating pump, one for the preheating start/stop, and one for the engine start/stop signal.

2013-12-02 - en

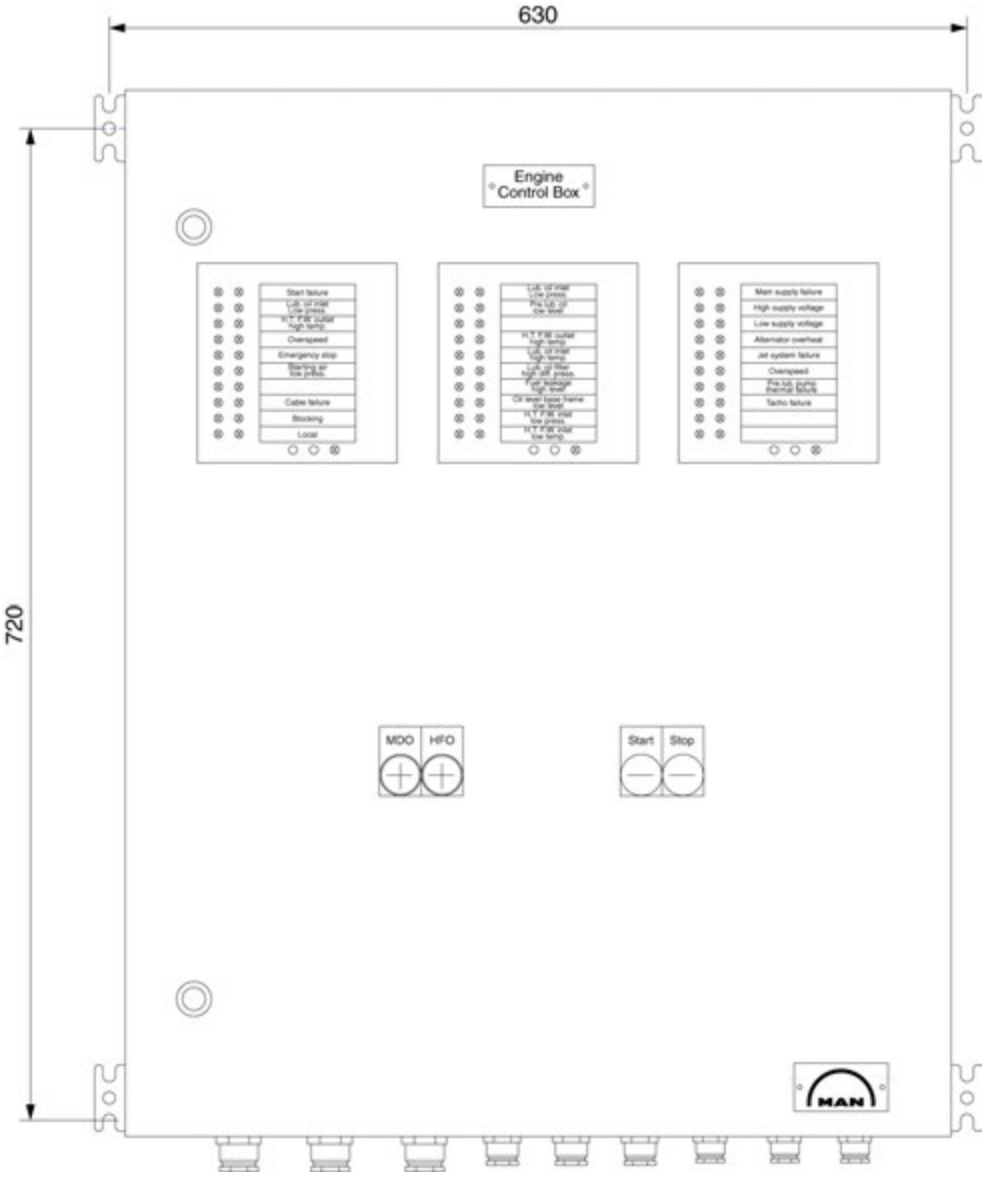

Figure 1: Engine control box.

Diesel oil / heavy fuel oil mode

The valve control for MDO or HFO running mode is incorporated in the engine control box. It is possible to change the valve position on the engine control panel or remote.

The push buttons for MDO and HFO are lighted push buttons to indicate the mode.

The valve control MDO/HFO is only used together with E 11 10 1.

Engine control box cabinet

The engine control box cabinet can be installed in the engine room, near the engine. *Fig 1* shows the dimensions of the cabinet.

Enclosure: IP 54.

2013-12-02 - en

The engine control box can also be installed in the engine control room. It is possible to integrate the engine control box in the switchboard.

2013-12-02 - en

Combined box with prelubricating oil pump, preheater and el turning device

Description

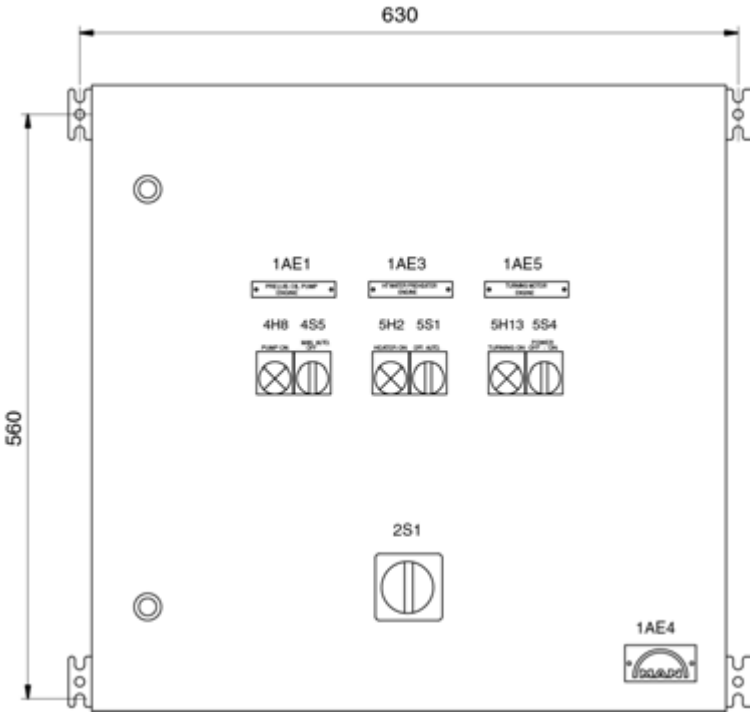

Figure 1: Dimensions

The box is a combined box with starters for prelubricating oil pump, preheater and el turning device.

The starter for prelubricating oil pump is for automatic controlling start/stop of the prelubricating oil pump built onto the engine.

Common for both pump starters in the cabinet is overload protection and automatic control system. On the front of the cabinet there is a lamp for "pump on", a change-over switch for manual start and automatic start of the pump; furthermore there is a common main cut-off switch.

The pump starter can be arranged for continuous or intermittent running. (For engine types L16/24, L21/31 & L27/38 only continuous running is accepted). *See also B 12 07 0, Prelubricating Pump.*

The preheater control is for controlling the electric heater built onto the engine for preheating of the engines jacket cooling water during stand-still.

On the front of the cabinet there is a lamp for "heater on" and a off/auto switch. Furthermore there is overload protection for the heater element.

The temperature is controlled by means of an on/off thermostat mounted in the common HT-outlet pipe. Furthermore the control system secures that the heater is activated only when the engine is in stand-still.

The box also include the control of el turning device. There is a "running" indication lamp and a on/off power switch on the front. The control for the turning gear is prepared with to contactors for forward and reverse control. The turning gear control has also overload protection.

2025-03-20 - en

3700290-3.2

Combined box with prelubricating oil pump, preheater and el turning device

Description

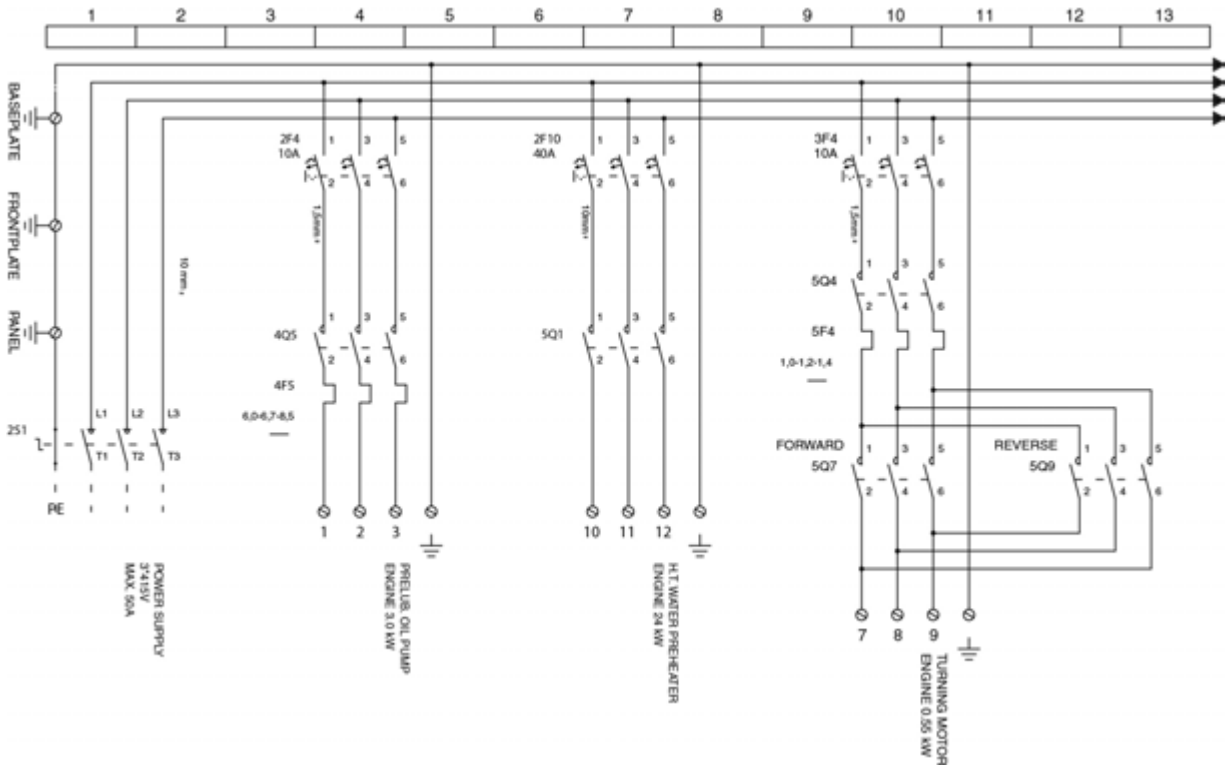

Figure 2: Wiring diagram

2025-03-20 - en

Prelubricating oil pump starting box

Description

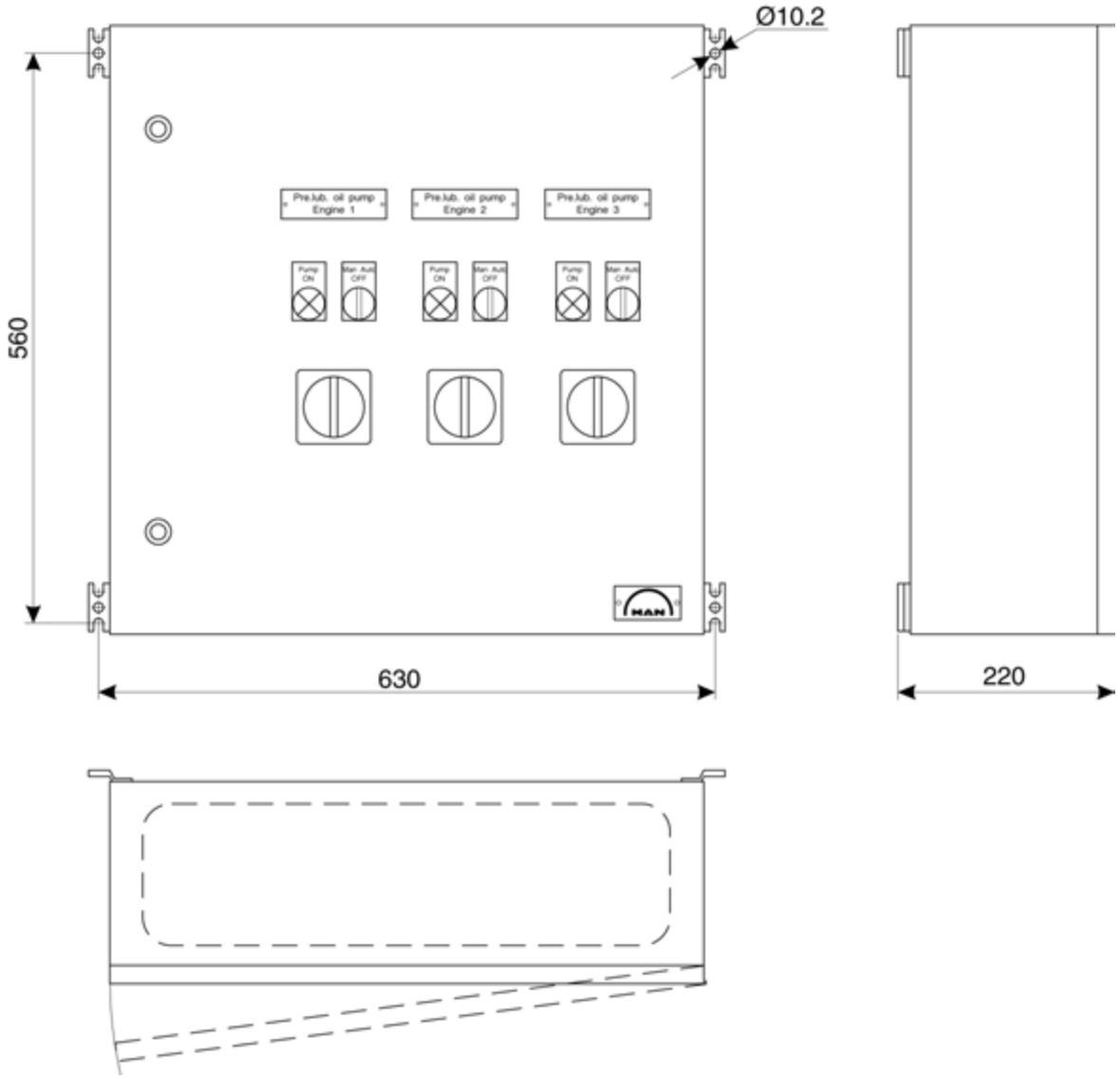

Figure 1: Dimensions.

The prelubricating oil pump box is for controlling the prelubricating oil pump built onto the engine.

The control box consists of a cabinet with starter, overload protection and control system. On the front of the cabinet there is a lamp for "pump on", a change-over switch for manual start and automatic start of the pump, furthermore there is a main switch.

The pump can be arranged for continuous or intermittent running. (For L16/24, L21/31 and L27/38 only continuous running is accepted).

Depending on the number of engines in the plant, the control box can be for one or several engines.

2025-03-20 - en

The prelubricating oil pump starting box can be combined with the high temperature preheater control box. *See also B 12 07 0, Prelubricating Pump.*

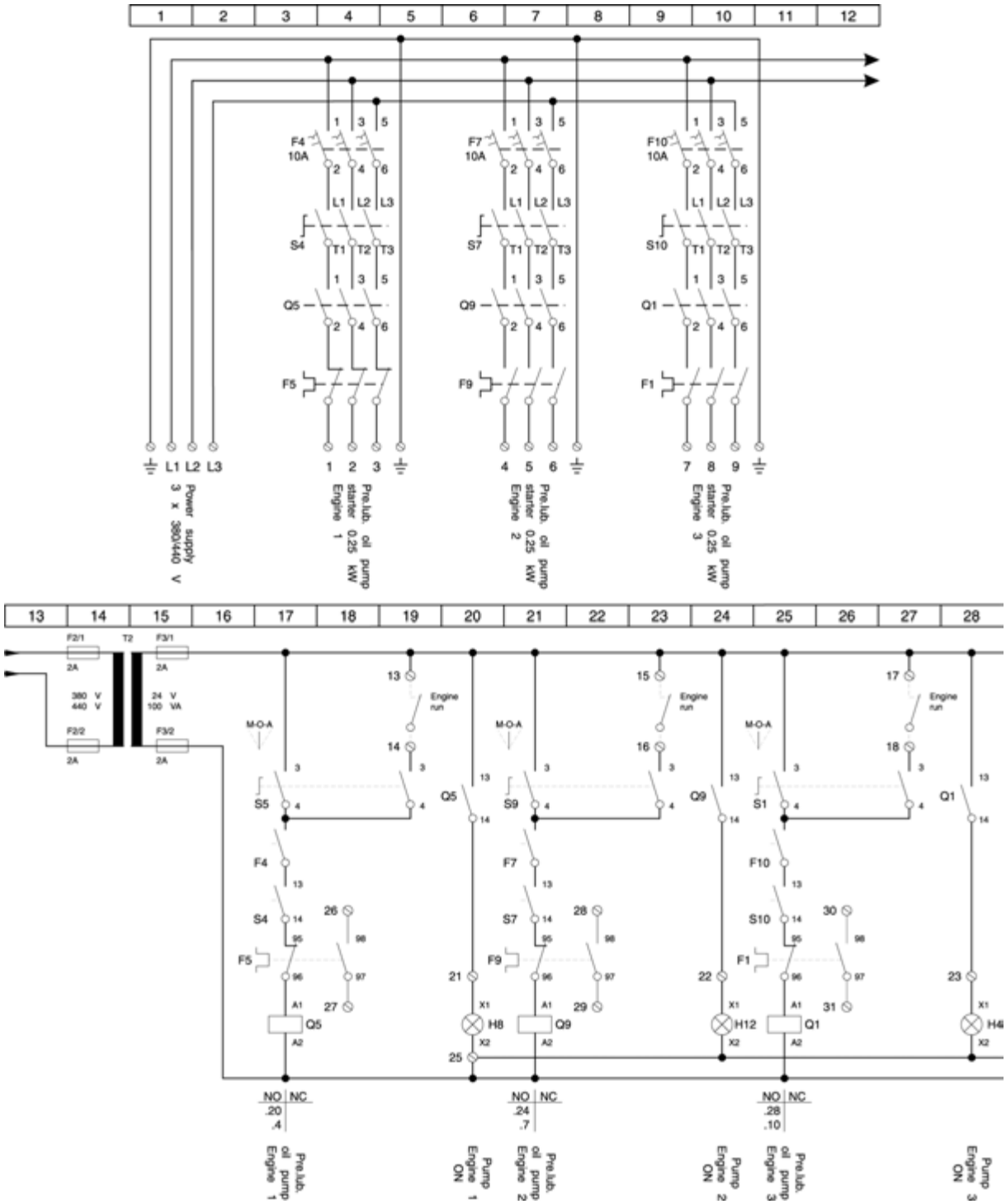

Figure 2: Wiring diagram.

High temperature preheater control box

Description

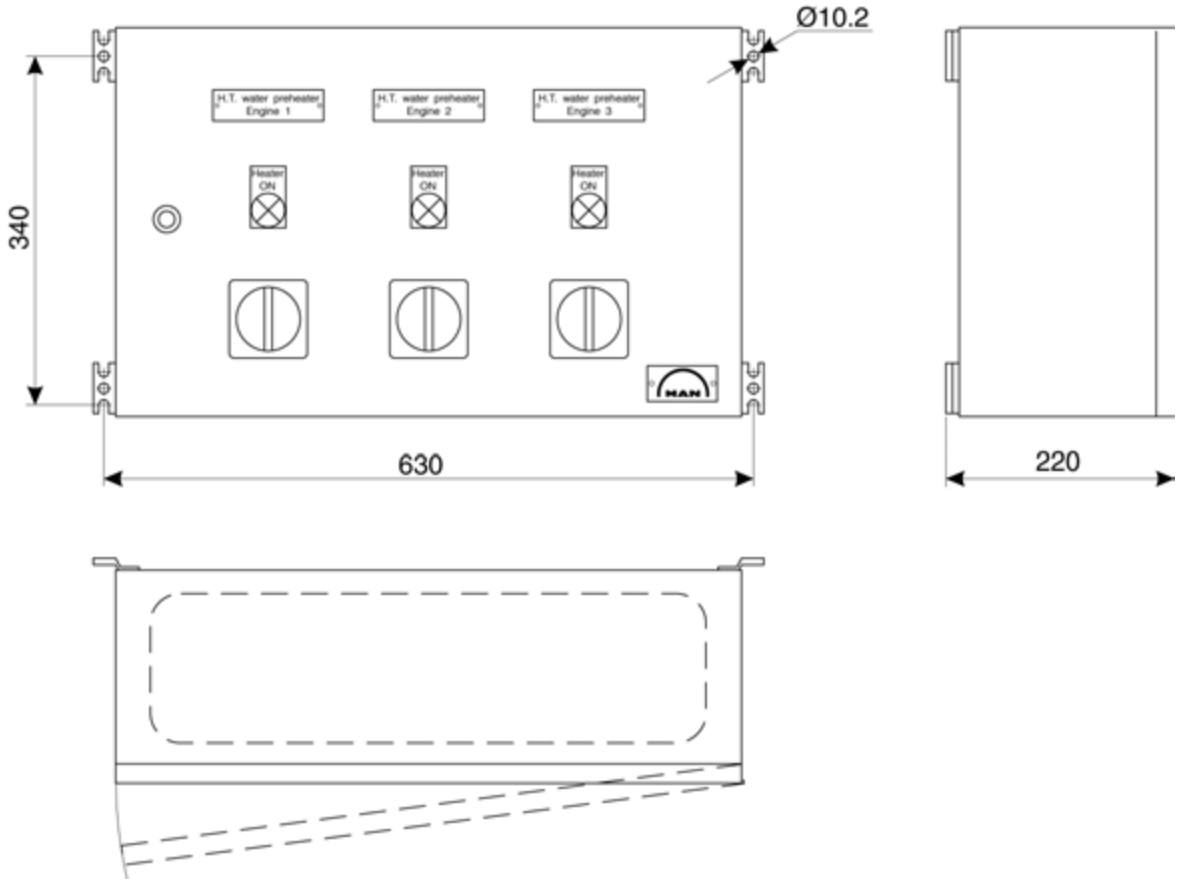

Figure 1: Dimensions of the control cabinet.

The preheater control box is for controlling the electric heater built onto the engine for preheating of the engines jacket cooling water during stand-still.

The control box consists of a cabinet with contactor and control system. On the front of the cabinet there is a lamp for "heater on" and a main switch for activating the system. Furthermore there is overload protection for the heater element.

The temperature is controlled by means of an on/off thermostat mounted in the common HT-outlet pipe. Furthermore the system secures that the heater is activated only when the engine is in stand-still.

Depending on the numbers of engines in the plant, the control box can be for one or several engines, however the dimensions of the cabinet will be the same. fig 1 illustrates a front for 3 engines.

The high temperature preheater control box can be combined with the pre-lubricating oil pump control box.

See also B 13 23 1 Preheating arrangement in high temperature system.

2013-04-04 - en

1631478-5.1

High temperature preheater control box

Description

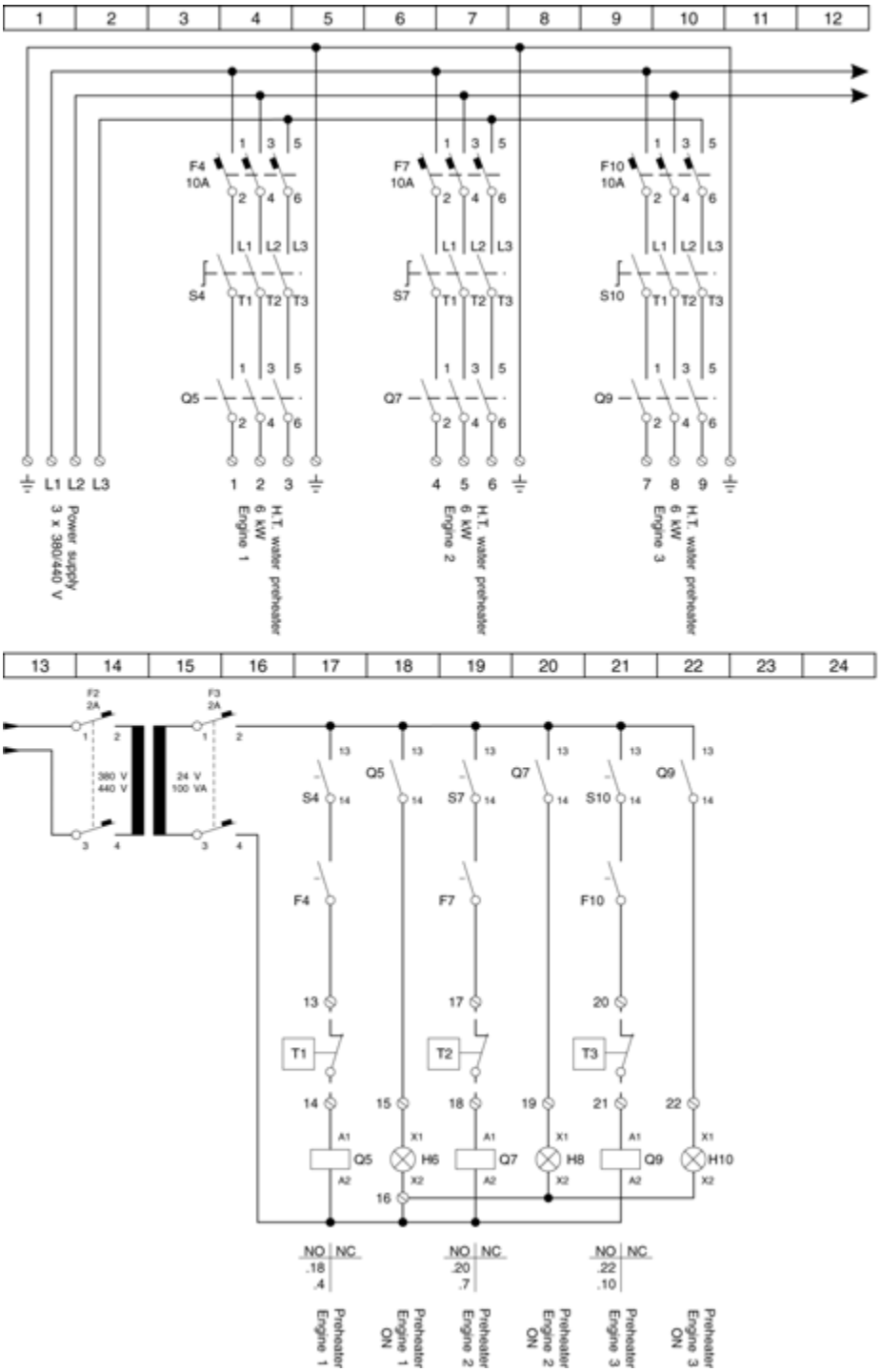

Figure 2: Wiring diagram.

2013-04-04 - en

Recommendations concerning steel foundations for resilient mounted GenSets

Foundation recommendations

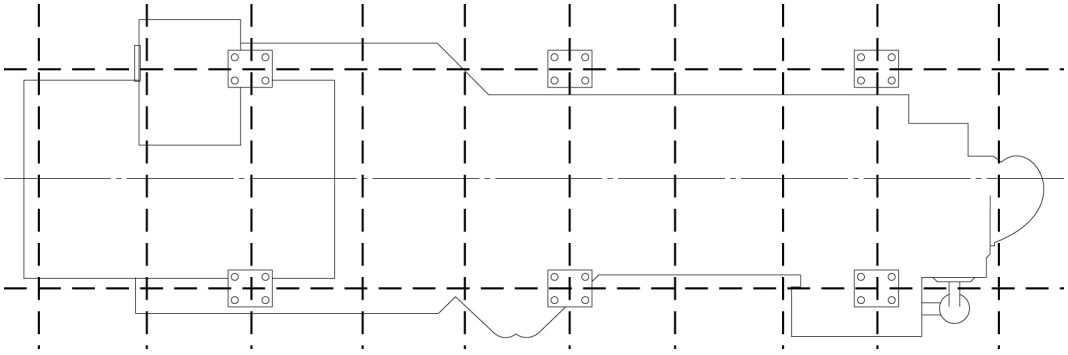

Figure 1: Resilient supports.

When the generating sets are installed on a transverse stiffened deck structure, it is generally recommended to strengthen the deck by a longitudinal stiffener in line with the resilient supports, *see figure 1.*

For longitudinal stiffened decks it is recommended to add transverse stiffening below the resilient supports.

It is a general recommendation that the steel foundations are in line with both the supporting transverse and longitudinal deck structure, *figure 2,* in order to obtain sufficient stiffness in the support of the resilient mounted generating sets.

The strength and the stiffness of the deck structure has to be based on the actual deck load, i.e. weight of machinery, tanks etc. and furthermore, resonance with the free forces and moments from especially the propulsion system have to be avoided.

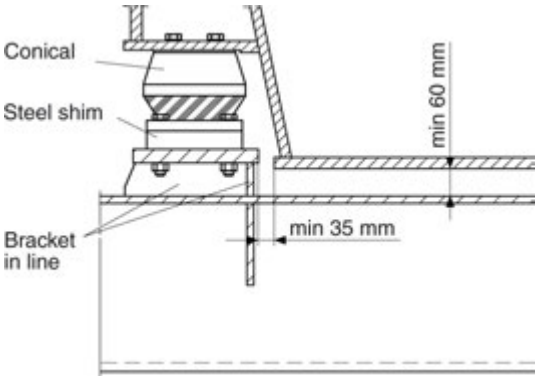

Figure 2: Transverse stiff deck structure

Stiffness for foundation has to be minimum the following:

2025-03-20 - en

- Z-direction, stiffness for foundation has to be minimum 20 times the conical stiffness.
- Y-direction, stiffness for foundation has to be minimum 10 times the conical stiffness.
  (see fig 3)

Example for conical stiffness:

- RD214-45 Shore A to 65 Shore A - stiffness 5.100 kN/m to11.620 kN/m (Preload 30 kN - 20 deg. C)

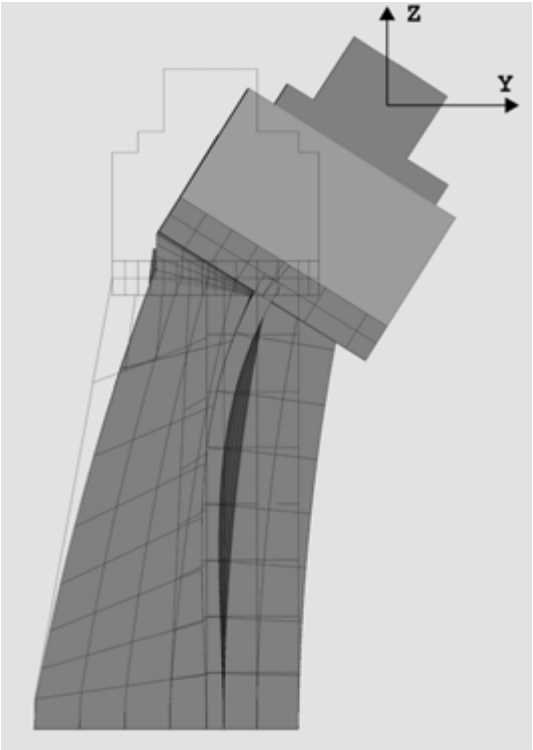

Figure 3: Stiffness for foundation

2025-03-20 - en

Resilient mounting of generating sets

Resilient mounting of generating sets

On resilient mounted generating sets, the diesel engine and the generator are placed on a common rigid base frame mounted on the ship's/erection hall's foundation by means of resilient supports, type Conical.

All connections from the generating set to the external systems should be equipped with flexible connections, and pipes, gangway etc. must not be welded to the external part of the installation.

Resilient support

A resilient mounting of the generating set is made with a number of conical mountings. The number and the distance between them depend on the size of the plant. These conical mountings are bolted to brackets on the base frame (see fig 1).

The setting from unloaded to loaded condition is normally between 5-11 mm for the conical mounting.

The exact setting can be found in the calculation of the conical mountings for the plant in question.

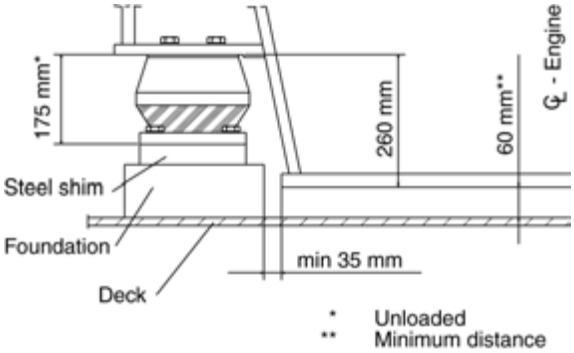

Figure 1: Resilient mounting of generating sets

2025-03-20 - en

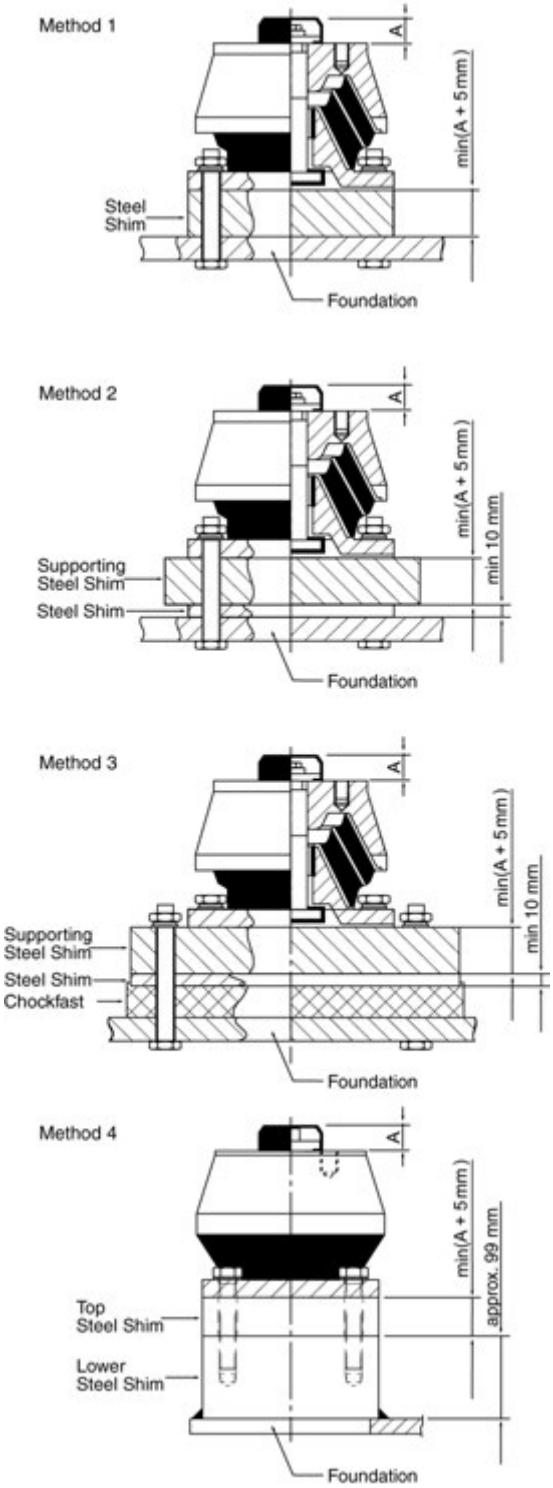

Figure 2: Support of conicals

2025-03-20 - en

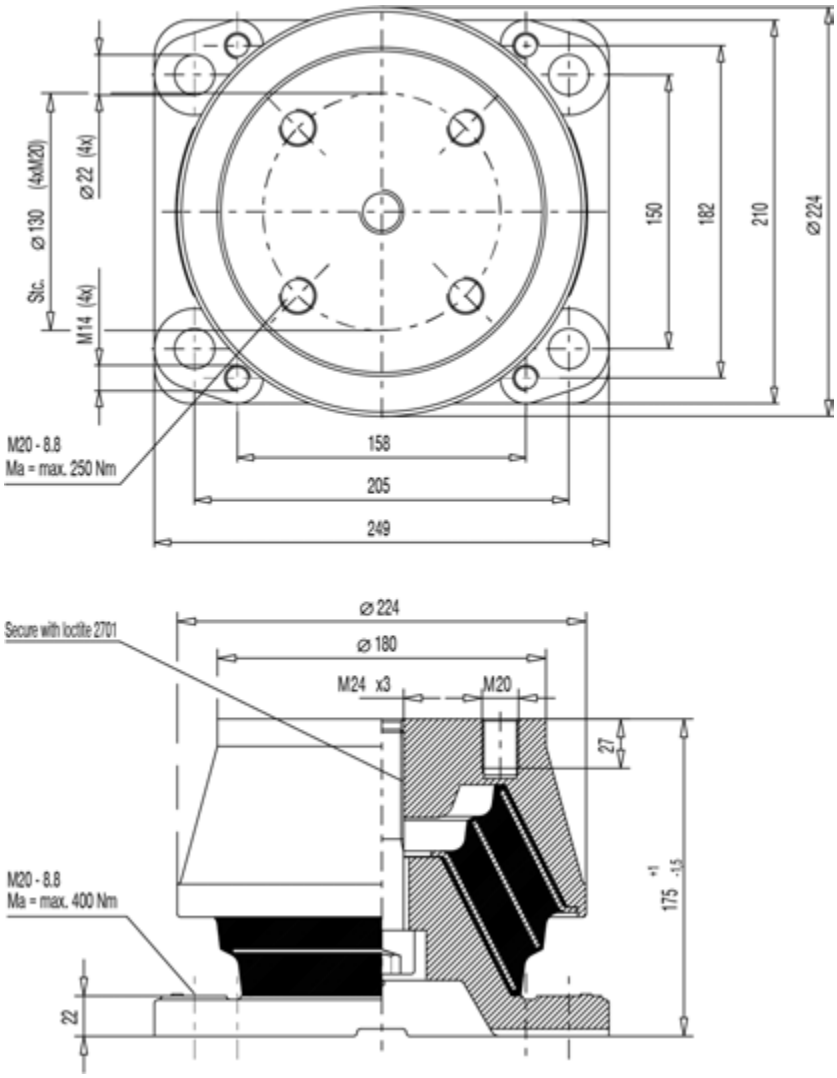

Figure 3: Conical mountings

The support of the individual conical mounting can be made in one of the following three ways:

1) The support between the bottom flange and the foundation of the conical mounting is made with a loose steel shim. This steel shim is adjusted to an exact measurement (min. 5 mm thicker than measurement A. See figure 2) for each conical mounting.
2) The support can also be made by means of two steel shims, at the top a loose shim at least 5 mm thicker than measurement A, and below a shim of approx. 10 mm which are adjusted for each conical mounting and then welded to the foundation.
3) The support can be made by means of chockfast. It is recommended to use two steel shims, the top shim should be loose and be at least 5 mm thicker than measurement A, the bottom shim should be cast in chockfast with a thickness of at least 10 mm.

Check the minimum permitted thickness of chockfast for the load surface of this application with chockfast supplier.

2025-03-20 - en

4) Finally, the support can be made by means of two steel shims. The top shim must be at least 5 mm thicker than measurement A, and the lower shim of approx. 99 mm. The lower shim must be welded to the foundation. The top shim is then adjusted and tightened to the lower shim.

NOTICE The steel shim must be at least 5 mm thicker than measurement 'A' in figure 2 to allow for the replacement or maintenance of the conical. See work card M5190305 for more information.

Irrespective of the method of support, it is recommended to use a loose steel shim to facilitate a possible future replacement of the conical mountings.

Check of Crankshaft Deflection

The resiliently mounted generating set is normally delivered from the factory with engine and alternator mounted on the common base frame.
Eventhough engine and alternator have been adjusted by the engine builder, with the alternator rotor placed correctly in the stator and the crankshaft deflection of the engine (autolog) within the prescribed tolerances, it is recommended to check the crankshaft deflection (autolog) before starting up the GenSet.

2025-03-20 - en

Shop test programme for marine GenSets

Requirement of the classification societies

Requirement of the classification societies	ABS	BV	DNV	LR	RINA	NK	IACS	MAN ES pro-gramm e
1) Starting attempts	X	X	-	X	X	X	X	X
2) Governor test (see page 2)	X	X	X	X	X	X	X	X
3) Test of safety and monitoring system	X	X	-	X	X	X	X	X
4) Load acceptance test (value in minutes)								

2025-03-24 - en

Engines driving alternators	Continuous rating (MCR)	Constant speed								
	100% [1*]	60	60	M	60	60	60	120 [2*]	60	60
	110%	30	45	M	45	45	45	45 [3*]	30	45
	75%	M	M	M	M	M	M	30	M	30
	50%	M	M	M	M	M	M	30	M	30
	25%	M	M	-	M	M	M	-	M	30
	Idling = 0%	M	M	-	M	M	M	-	M	30
Engines driving alternators for electric propulsion	Continuous rating (MCR)	Constant speed								
	100% [1*]	60	60	M	60	60	60	120 [2*]	60	60
	110%	30	45	M	45	45	45	45 [3*]	30	45
	90%	-	-	M	-	-	-	-	-	30
	75%	M	M	M	M	M	M	30	M	30
	50%	M	M	M	M	M	M	30	M	30
	25%	M	M	-	M	M	M	-	M	30
	Idling = 0%	M	M	-	M	M	M	-	M	30
5)	Verification of GenSet parallel running, if possible (cos Φ = 1, unless otherwise stated)									
6a)	Crankshaft deflection measurement of engines with rigid coupling in both cold and warm condition									
6b)	Crankshaft deflection measurement of engines with flexible coupling only in cold condition									
7)	Inspection of lubricating oil filter cartridges of each engine									
8)	General inspection									

1*	Two service recordings at an interval of 30 minutes.
2*	According to agreement with NK the running time can be reduced to 60 minutes.
3*	According to agreement with NK the running time can be reduced to 30 minutes.
M	Measurement at steady state condition of all engine parameters.
IACS	International Association of Classification Societies.

The operating values to be measured and recorded during the acceptance test have been specified in accordance with ISO 3046-1:2002 and with the rules of the classification societies.

The operation values are to be confirmed by the customer or his representative and the person responsible for the acceptance test by their signature on the test report. After the acceptance test components will be checked so far it is possible without dismantling. Dismantling of components is carried out on the customer's or his representative's request.

2025-03-24 - en

GenSet load responce
Load application for ship electrical systems

In the age of highly turbocharged diesel engines, building rules of classification societies regarding load application (e.g. 0 % => 50 % => 100 %) cannot be complied with, in all cases. However the requirements of the International Association of Classification Societies (IACS) and ISO 8528-5 are realistic. In the case of ship´s engines the application of IACS requirements has to be clarified with the respective classification society as well as with the shipyard and the owner. Therefore the IACS requirements has been established as generel rule.

For applications from 0 % to 100 % continuous rating, according to IACS and ISO 8528-5, the following diagram is applied:

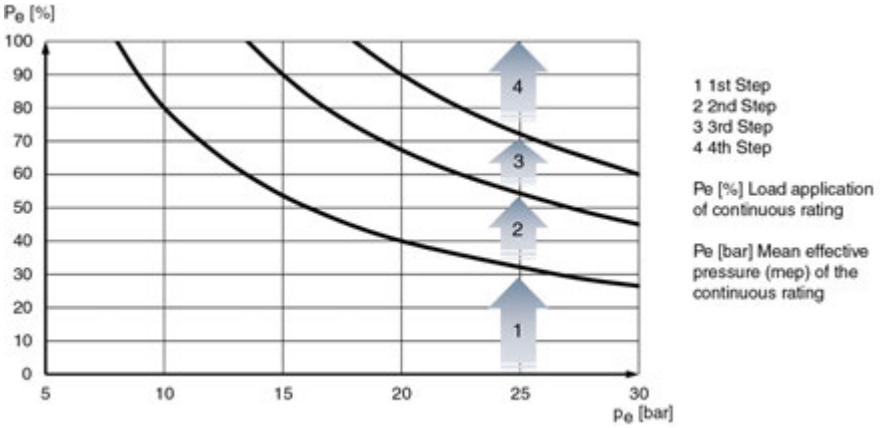

Fig. 1 Load application in steps as per IACS and ISO 8528-5.

According to the diagram in Fig. 1 the maximum allowable load application steps are defined in the table below. (24.4 bar mean effective pressure has been determined as a mean value for the listed engine types.)

Note: Our small bore GenSets has normally a better load responce than required by IACS and therefore a standard load responce test where three load steps (3 x 33%) is applied will be demostrated at factory acceptance test.

Minimum requirements concerning dynamic speed drop, remaining speed variation and recovery time during load application are listed below.

In case of a load drop of 100 % nominal engine power, the dynamical speed variation must not exceed 10 % of the nominal speed and the remaining speed variation must not surpass 5 % of the nominal speed.

2025-03-24 - en

Engine	bmep (bar) *	1 st step	2nd step	3th step	4th step
L16/24	20.7-23.6	IACS 33% MDT 34%	IACS 23% MDT 33%	IACS 18% MDT 33%	IACS 26%
L23/30H Mk1	17.9-18.2				
L23/30H Mk2	19.6-19.9				
L23/30H Mk3	22.4-23.8				
L21/31	22.4-27.3				
L27/38	23.0-25.3				
L28/32H	17.8 -17.9				
* see project guide B 10 01 1 'main particulars', for actual bmep at nominel rpm.					

Fig. 2. maximum allowable load application steps (higher load steps than listed are not possible as a standard)

Regulating test and load responce performance

Load step on MAN Energy Solutions GenSets is to be tested according to following procedure.

Classification society	Dynamic speed drop in % of the nominal speed	Remaining speed variation in % of the nominal speed	Recovery time until reaching the tolerance band ±1 % of nominal speed
RINA	≤ 10 %	≤ 5 %	≤ 5 sec.
Lloyd´s Register			
American Bureau of Shipping			
Bureau Veritas			
Det Norske Veritas			
ISO 8528-5			

Fig. 3 Minimum requirements of the classification societies plus ISO rule.

Momentum speed variation (m) must not vary more than 10% max. deviation from steady speed 1 %. Permanent speed variation (p) must not be higher than 5%.

2025-03-24 - en

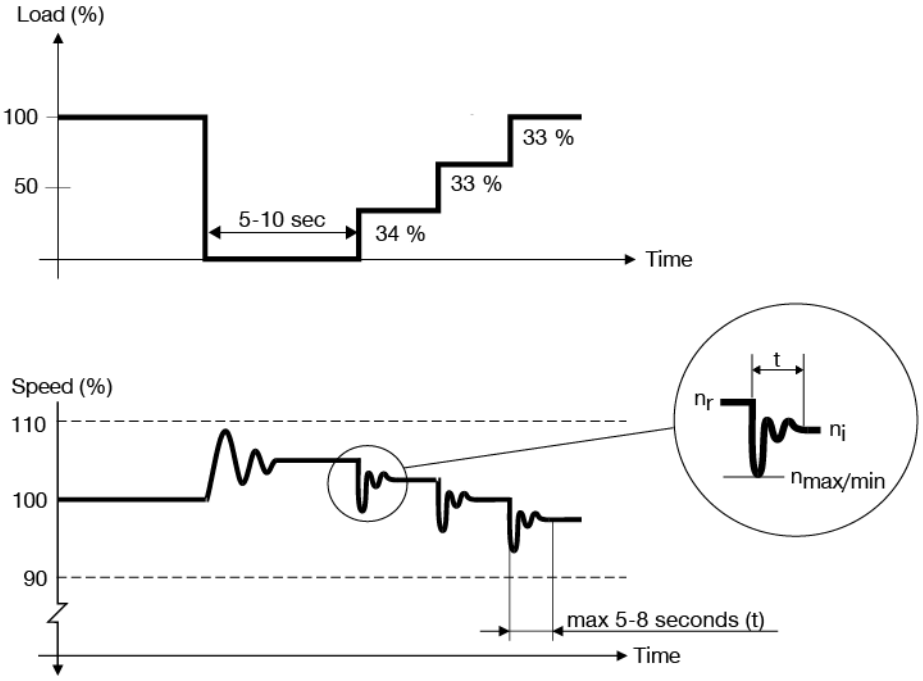

Fig. 4 Minimum requirements of the classification societies plus ISO rule.

bmep: Must be found in product guide. For most classification sociaties 3 x 33% load application will be accepted. *Actual classification society rules must be observed.*

Speed droop: _____, Needle valve open: _____°

$$m = \frac{n_{max/min} - n_r}{n_r} \times 100 \qquad p = \frac{n_i - n_r}{n_r} \times 100$$

Load (%)	(n_r) Rated speed [Hz]	($n_{max/min}$) Momentum speed [Hz]	(n_i) Permanent speed [Hz]	(m) Momentum speed vari-ation [%]	(p) Permanent speed vari-ation [%]	(t) Time to steady speed [sec]
0 - 34						
34 - 67						
67 - 100						

According to IACS requirements and ISO 8528-5.

2025-03-24 - en

This page is intentionally left blank

2025-03-24 - en

Weight and dimensions of principal parts

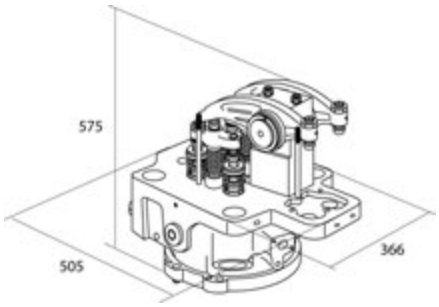	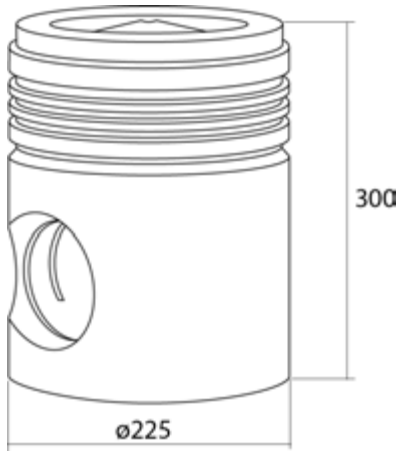
Cylinder head approx.130 kg Cylinder head incl. rocker arms approx. 180 kg	Piston approx. 21 kg
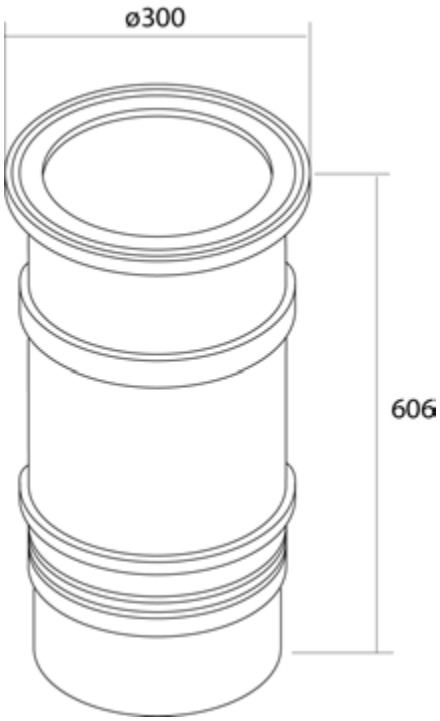	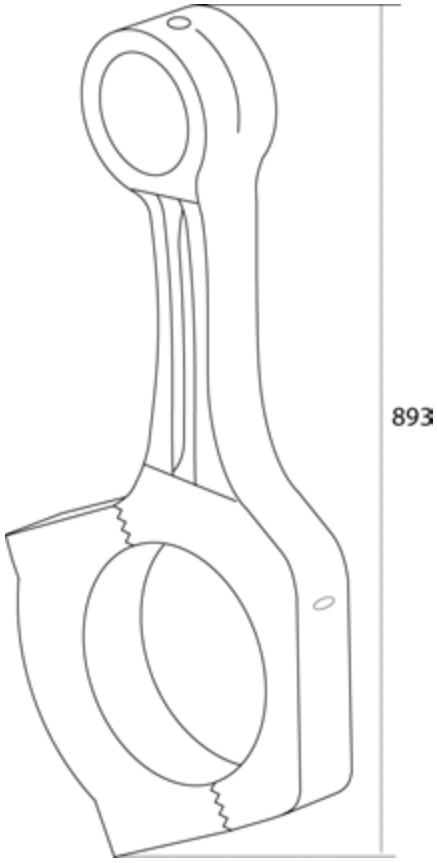
Cylinder liner approx. 75 kg	Connecting rod approx. 41 kg

2015-02-16 - en

This page is intentionally left blank

2015-02-16 - en

Standard spare parts

General

Spare parts for unrestricted service, according to the classification societies requirements/recommendations and/or MAN Energy Solutions standard.

Cylinder head

Description	Plates	Item	Qty.
Valve seat ring, inlet	P50501	064	2
Valve seat ring, exhaust		076	4
O-ring, cooling water connections		184	8
O-ring		351	6
O-ring		338	2
Valve spindles, inlet and exhaust	P50502	512	6
Conical ring in 2/2		465	6
Spring, inner		489	6
Spring, outer		490	6
Rotocap, complete		477	4
Gasket, coaming	P50510	026	1
Gasket, top cover		075	1

Piston, connecting rod and cylinder liner

Description	Plates	Item	Qty.
Piston pin	P50602	003	1
Retaining ring		006	2
Connecting rod stud	P50603	141	2
Connecting rod nut		153	2
Bush for connecting rod		104	1
Connecting rod bearing	P50604	003	1
Piston ring	P50605	093	1
Piston ring		103	1
Piston ring		115	1
Oil scraper ring		127	1
Sealing ring	P50610	031	1
O-ring cylinder liner		043	2

Operating gear for valves and fuel injection pumps

Description	Plates	Item	Qty.
Sealing ring	P50801	185	4

2024-04-15 - en

Engine frame and base frame

Description	Plates	Item	Qty.
Stud Nut	P51101	169 170	2 2
Main bearing shells Thrust washer	P51104	021 116	1 2
O-ring O-ring (safety valve)	P51106	058 740	2 2

Turbocharger system

Description	Plates	Item	Qty.
Gasket O-ring, cooling water connections	P51202	024 002/111 264/110	2 2
O-ring inlet bend Gasket	P51203	234/047 210/045	1 1

Fuel oil system and injection equipment

Description	Plates	Item	Qty.
Fuel injection pump	P51401	374	1
Fuel injection valve	P51402	177/325	4
Fuel oil high-pressure pipe	P51404	010	1

Notice

Scope of this list are subject to change and therefore the latest version of this document should always be used, please see MAN Energy Solutions homepage or Extranet.
Spare parts listed may also vary if optional components are selected.

NOTICE

Please notice that the content of spare parts for specific projects may vary from the list of standard spare parts.

2024-04-15 - en

Standard spare parts

General

Spare parts for unrestricted service, according to the classification societies requirements/recommendations and/or MAN Energy Solutions standard.

Cylinder head

Description	Plates	Item	Qty.
O-ring inlet bend	P50501	004	1
Gasket		003	1
Valve seat ring		076	6
O-ring, cooling water connections		184	8
O-ring		338	2
Valve spindles, inlet and exhaust	P50502	512	6
Conical ring in 2/2		465	6
Spring, inner		489	6
Spring, outer		490	6
Rotocap, complete		477	4
Gasket, coaming	P50510	026	1
Gasket, top cover		075	1

Piston, connecting rod and cylinder liner

Description	Plates	Item	Qty.
Piston pin	P50602	003	1
Retaining ring		006	2
Connecting rod stud	P50603	141	2
Connecting rod nut		153	2
Bush for connecting rod		104	1
Connecting rod bearing	P50604	003	1
Piston ring	P50605	093	1
Piston ring		103	1
Piston ring		115	1
Oil scraper ring		127	1
Sealing ring	P50610	031	1
O-ring cylinder liner		043	2

Operating gear for valves and fuel injection pumps

Description	Plates	Item	Qty.
Sealing ring	P50801	185	4

2024-04-15 - en

Engine frame and base frame

Description	Plates	Item	Qty.
Stud Nut	P51101	169 170	2 2
Main bearing shells Thrust washer	P51104	021 116	1 2
O-ring O-ring (safety valve)	P51106	058 740	2 2

Turbocharger system

Description	Plates	Item	Qty.
Gasket	P51202	024 002/111	2
O-ring, cooling water connections		264/110	2

Fuel oil system and injection equipment

Description	Plates	Item	Qty.
Fuel injection pump	P51401	374	1
Fuel injection valve	P51402	177/325	4
Fuel oil high-pressure pipe	P51404	010	1

Notice

Scope of this list are subject to change and therefore the latest version of this document should always be used, please see MAN Energy Solutions homepage or Extranet.
Spare parts listed may also vary if optional components are selected.

NOTICE

Please notice that the content of spare parts for specific projects may vary from the list of standard spare parts.

2024-04-15 - en

Introduction to spare part plates for tools

Description

For our engines the following three tool packages are available:

Standard tool for normal maintenance
This package is delivered as standard, this tool package do consist of a mix of special designed tools as well as ordinary available tools needed in connection with the operation of the engine and to perform daily engine maintenance. The tool do as well consists of tools to perform emergency repair as required by the various classification societies.

Additional tools
This tool package can only be ordered as single parts from the list in addition to the standard tool package. The tool package consists of special tools needed in addition to the standard tool in case a major overhaul or a part of this is to be carried out.

Hand Tools
This tool package can be ordered as a whole or partly in addition to the standard tool package. The tool package consists of ordinary hand tools needed in addition to the delivered standard tool for normal maintenance, in connection with the daily maintenance as well as major overhauls.

2025-03-20 - en

This page is intentionally left blank

Standard tools for normal maintenance

Cylinder head

Name	Sketch	Supply per ship		Item no
		Working	Spare	
Lifting tool for cylinder head, complete	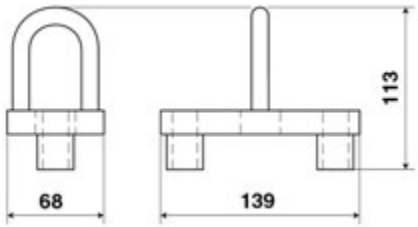		1	014
Mounting tool for valves, complete	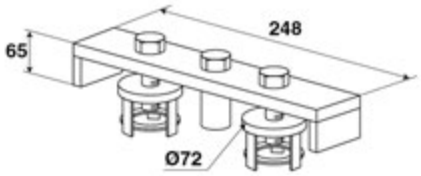		1	051
Grinding tool for cylinder head and cylinder liner	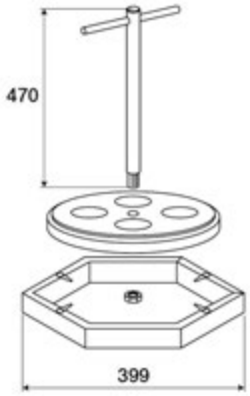		1	205
Hand wheel for indicator valve	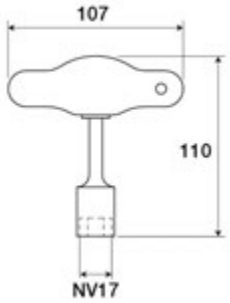		1	673

2025-09-02 - en

Piston, connecting rod and cylinder liner

Name	Sketch	Supply per ship		Item no
		Working	Spare	
Eye screw for lifting of piston	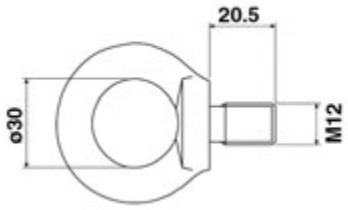		1	021
Shackle for lifting of piston			1	033
Eye bolt for piston lift at check of connecting rod big-end bearing			1	070
Back stop for cylinder liner, 2 pcs	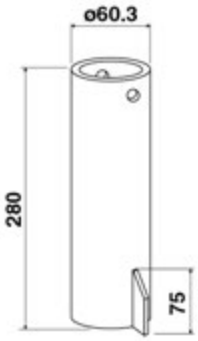		1	094

2025-09-02 - en

Name	Sketch	Supply per ship		Item no
		Working	Spare	
Guide ring for mounting of piston with flame ring			1	116
Piston ring opener	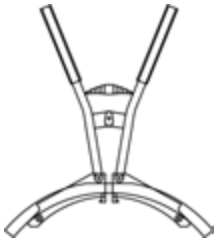		1	141
Testing mandrel for piston ring grooves, 4.43 mm			1	153
Testing mandrel for scraper ring grooves, 7.43 mm			1	165
Plier for piston pin lock ring	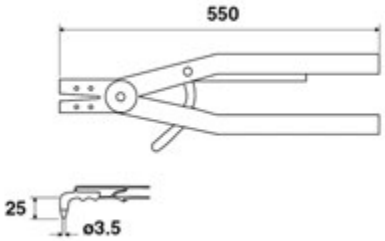		1	200
Torque spanner, 20-120 Nm	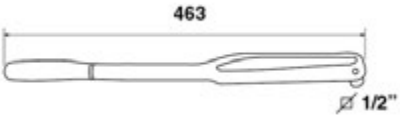		1	261
Torque spanner, 80-360 Nm	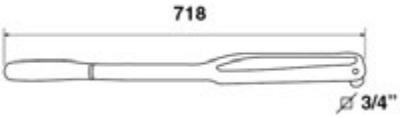		1	273

2025-09-02 - en

Name	Sketch	Supply per ship		Item no
		Working	Spare	
Socket	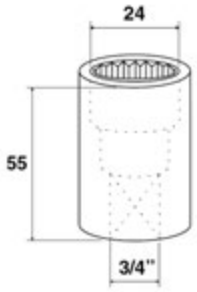		1	381
Lifting tool for cylinder liner	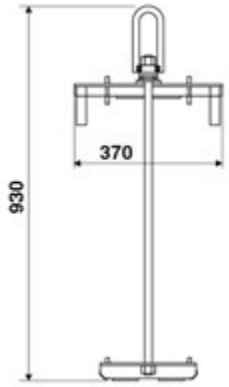		1	452
Magnifier (30x)	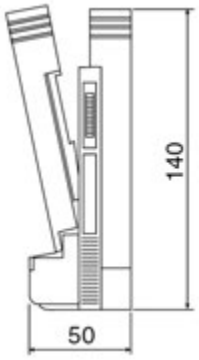		1	559
Grinding tool for cylinder liner	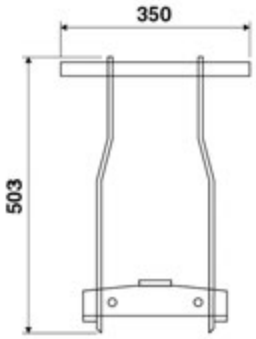		1	655

2025-09-02 - en

Operating gear for inlet valves, exhaust valves and fuel injection pumps

Name	Sketch	Supply per ship		Item no
		Working	Spare	
Feeler gauge for inlet valves (2 pcs)	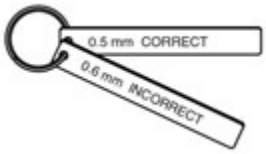		1	010
Feeler gauge for exhaust valves (2 pcs)	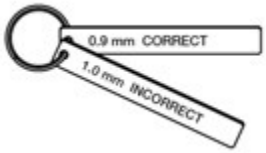		1	022
Extractor for thrust piece on roller guide for fuel pump	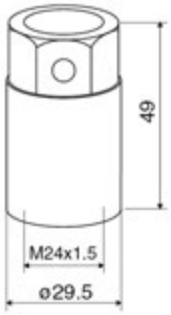		1	058
Distance piece			1	071

2025-09-02 - en

Control and safety systems - automatics and instruments

Name	Sketch	Supply per ship		Item no
		Working	Spare	
Spanner for adjusting of over-speed stop	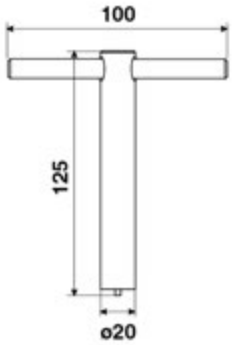		1	016

Crankshaft and main bearing

Name	Sketch	Supply per ship		Item no
		Working	Spare	
Turning rod	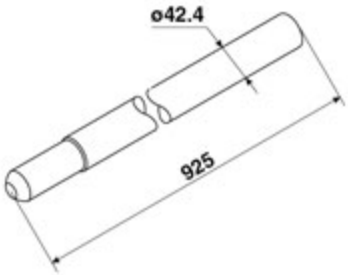		1	012
Crankshaft alignment gauge (autolog)	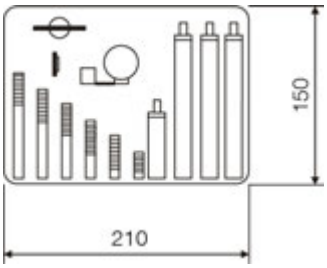		1	059
Dismantling tool for main bearing, 2 pieces	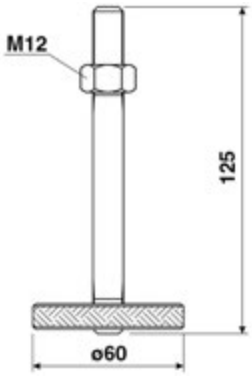		1	106

2025-09-02 - en

Name	Sketch	Supply per ship		Item no
		Working	Spare	
Lifting straps for main and guide bearing cap, 2 pieces	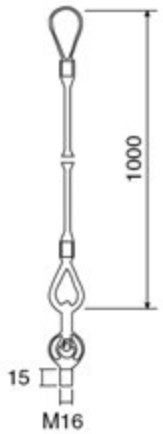		1	156
Dismantling tool for guide bearing shells	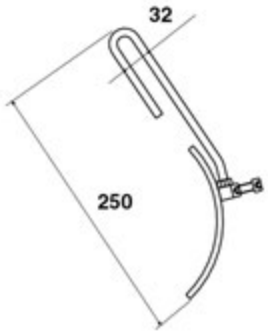		1	220
Tool for upper main bearing O-ring	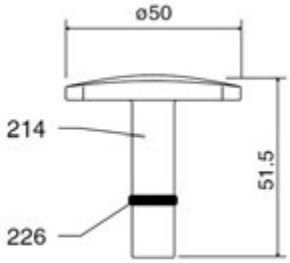		1 1	214 226

2025-09-02 - en

Turbocharger system

Name	Sketch	Supply per ship		Item no
		Working	Spare	
Container complete for water washing of compressor side Reducing piece Fitting Fitting	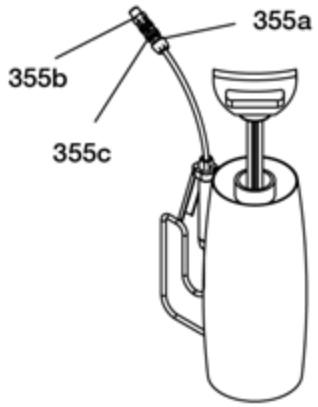		1	355 355a 355b 355c
Blowgun for dry cleaning of turbocharger Snap coupling Ball valve Snap coupling Snap coupling Packing rings Soft blast (granulate)	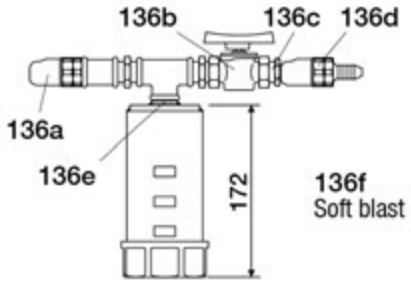		1	136 136a 136b 136c 136d 136e 136f
Water washing of turbine side, complete Snap coupling Regulating valve Ball valve Snap coupling Snap coupling	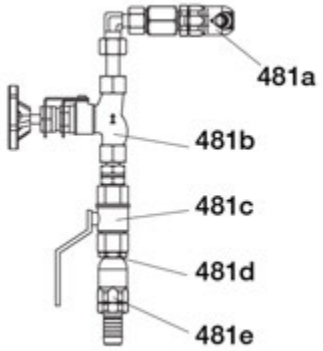		1	481 481a 481b 481c 481d 481e

2025-09-02 - en

Fuel oil system and injection equipment

Name	Sketch	Supply per ship		Item no
		Working	Spare	
Pressure testing pump, complete	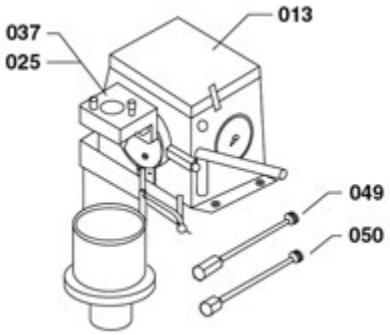		1	013
Clamping bracket for fuel injector			1	025
Clamping bracket for fuel injection pump			1	037
Fuel pipe			1	049
Fuel pipe			1	050
Spanner for fuel injection pump	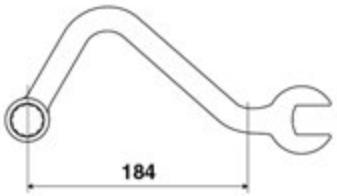		1	204
Grinding tool for seat for fuel injection valve	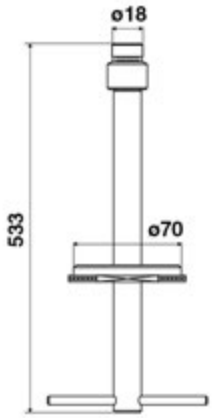		1	361
Extractor for fuel injector valve	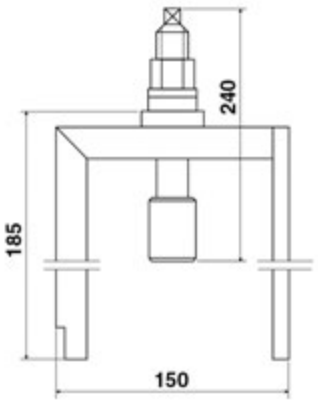		1	407

2025-09-02 - en

1683334-4.11

Name	Sketch	Supply per ship		Item no
		Working	Spare	
Measuring device for plunger lift	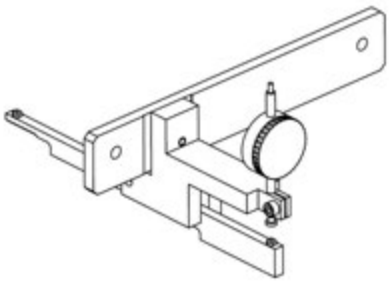		1	420
Wrench 1/2" for high pressure pipe 24 mm 27 mm			1 1	838a 838b
Long socket spanner 1/2" 24 mm				843
Long socket spanner 1/2" 27 mm				855
Torque spanner 1/2" 50-300 Nm				902

Standard tools for normal maintenance
Description

2025-09-02 - en

Lubricating oil system

Name	Sketch	Supply per ship		Item no
		Working	Spare	
Guide bar for dismantling of lubricating oil cooler	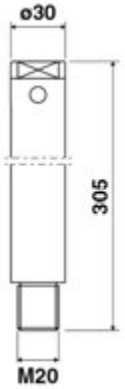		1	019

Hydraulic tools

Name	Sketch	Supply per ship		Item no
		Working	Spare	
Hydraulic tools complete consisting of the following boxes:				806
Pressure pump, complete with wooden box, incl item 023, 118, 096, 026	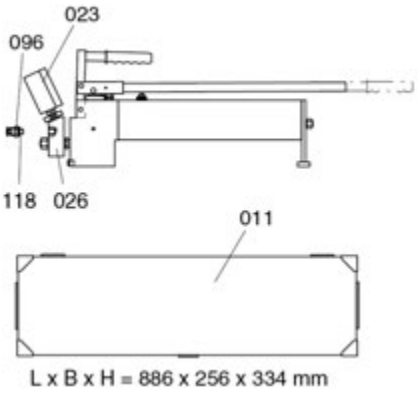		1	011
Manometer			1	023
Gasket for item 096			1	118
Quick coupling			1	096
Distributor			1	026
Hydraulic tools for connecting rod with wooden box, complete	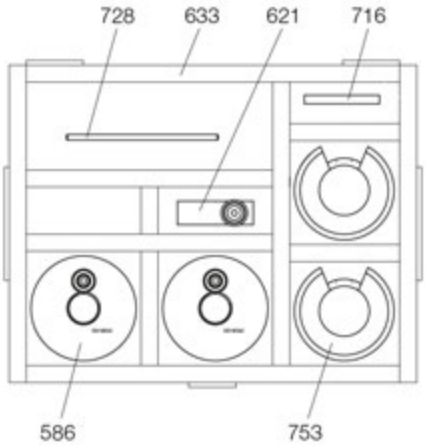		1	633
Quick coupling			1	179
Venting screw			1	275
Ball			1	645
Disc			1	657
Piston for hydraulic jack			1	704
Set of O-rings with back-up ring			2	716
Adjusting rod			1	728
Cylinder for hydraulic jack			1	741

2025-09-02 - en

1683334-4.11

Standard tools for normal maintenance

Description

Name	Sketch	Supply per ship		Item no
		Working	Spare	
Hydraulic jack as item nos 179, 275, 645, 657, 704, 716, 728, 741, 753	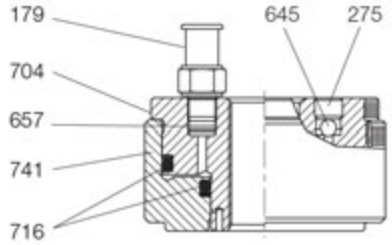		2	586
Spacer piece			2	753
Angle piece complete, incl item 765, 777, 789, 790			2	621
O-ring			1	765
Adapter	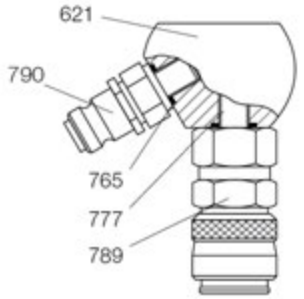		1	777
Coupling socket			1	789
Quick coupling			1	790
Hydraulic tools for cylinder head with wooden box, complete	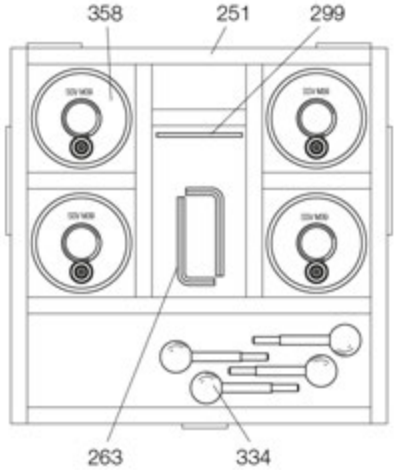		1	251
Quick coupling			1	179
Allen key, 7 mm			2	263
Venting screw			1	275
Ball			1	645
Piston for hydraulic jack			1	287
Set of O-rings with back-up ring			2	299
Cylinder for hydraulic jack			1	310
Tommy bar			4	334
Hydraulic jack as item nos 179, 275, 287, 299, 309, 310, 645, 657, 812	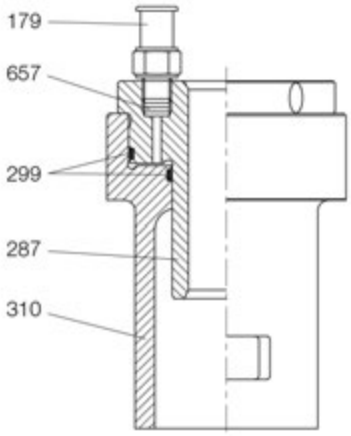		4	358
Disc			1	657

2025-09-02 - en

Name	Sketch	Supply per ship		Item no
		Working	Spare	
Hydraulic tools for main bearings with wooden box, complete	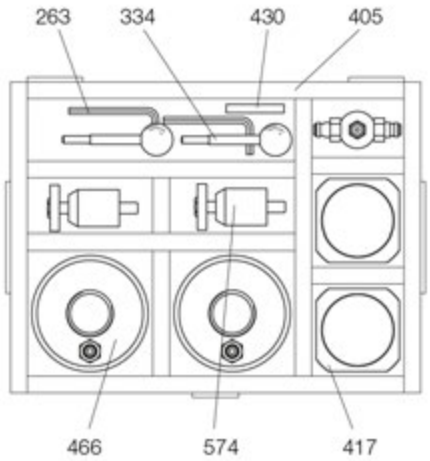		1	405
Quick coupling			1	179
Allen key, 7 mm			2	263
Venting screw			1	275
Tommy bar			2	334
Ball			1	645
Disc			1	657
Spacer piece			2	417
Cylinder for hydraulic jack			1	429
Set of O-ring with back-up ring	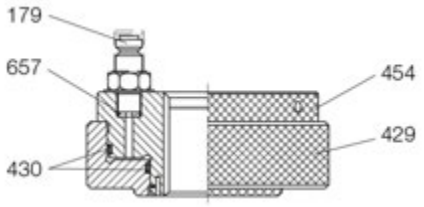		1	430
Piston for hydraulic jack			1	454
Hydraulic jack as item 179, 275, 429, 430, 454, 645, 657, 824			1	466
Guide			1	574
Hose for hydraulic tools complete (1000 mm), 4 pieces	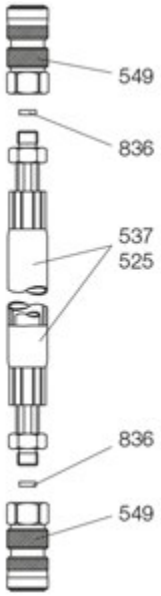		4	501
Hose for hydraulic tools complete (3000 mm), 1 piece			1	513
Hose (3000 mm)			1	537
Quick coupling with protecting cap			1	549
Hose (1000 mm)			1	525
Disc			1	836

2025-09-02 - en

Name	Sketch	Supply per ship		Item no
		Working	Spare	
Distributing piece for cylinder head, complete Gasket Quick coupling	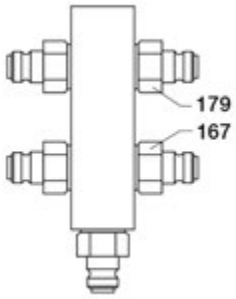		1 1 1	155 167 179
Distributing piece for main bearing, complete Gasket Quick coupling	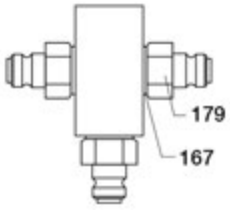		1 1 1	202 167 179
Measuring device (not a part of Hydraulic tools complete, to be ordered separately)	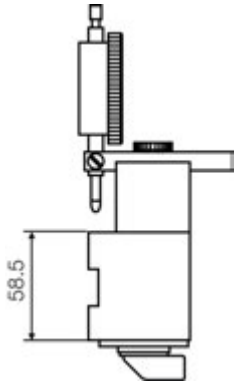		2	533

2025-09-02 - en

Additional tools

Cylinder head

Name	Sketch	Supply per ship		Item no
		Working	Spare	
Grinding table for cylinder head with bracket for wall mounting, complete	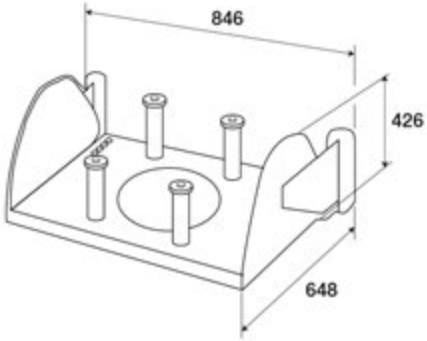		1	254
Grinding table for cylinder head with frame for floor mounting, complete	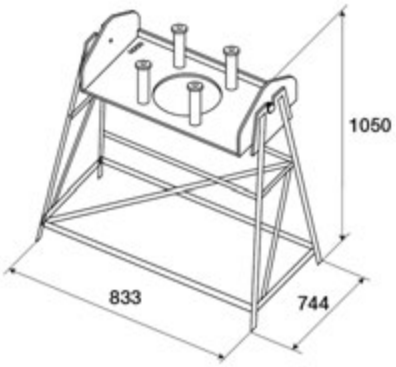		1	301
Grinding machine for valve seat rings	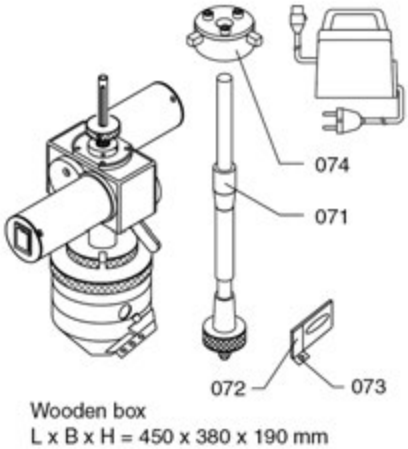		1	070
Mandrel			1	071
Cutting tool			1	072
Carbide cutting insert			1	073
Supporting spider			1	074

2025-02-07 - en

3700404-4.11

Name	Sketch	Supply per ship		Item no
		Working	Spare	
Max. pressure indicator	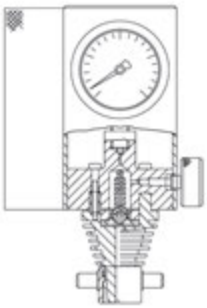		1	109
Grinding machine for valve seat rings	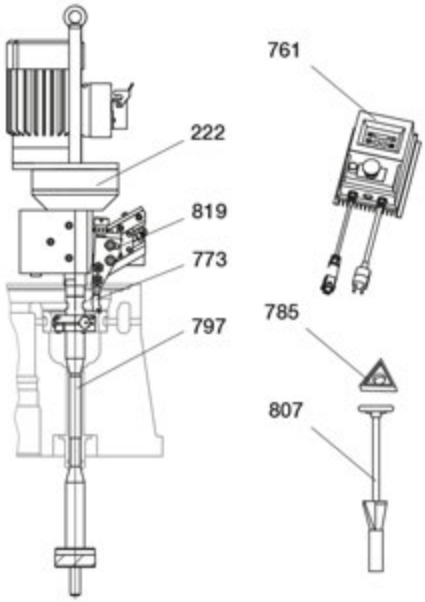		1	222
Frequence converter			1	761
Tool holder			1	773
Turning bit			1	785
Pilot spindle incl. stabilizer			1	797
Cleaning tool			1	807
Tool holder bracket			1	819
Grinding machine for valve spindle, complete	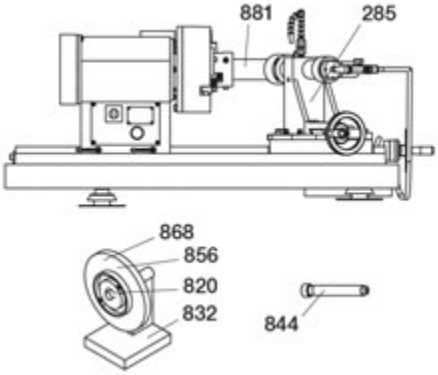		1	285
Grinding wheel hub			1	820
Balancing apparatus			1	832
Grinding wheel dresser			1	844
Grinding wheel, grain size 46			1	856
Grinding wheel, grain size 80			1	868
Stabilizer (valve stem ø10-18 mm)			1	881

Additional tools
Description

2025-02-07 - en

Name	Sketch	Supply per ship		Item no
		Working	Spare	
Mounting tool for valve seat ring, complete	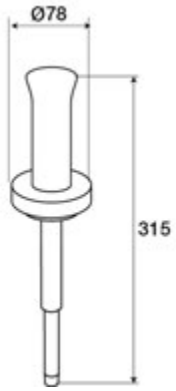		1	457
Extractor for valve seat ring, complete	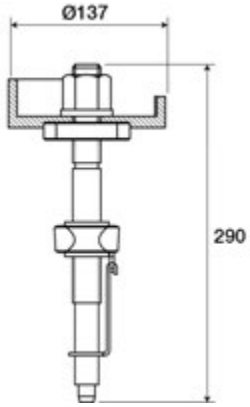		1	504
Mandrel for dismounting of valve guide	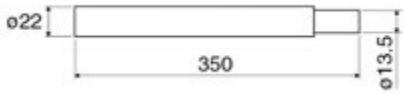		1	060
Grinding tool for valves 230V 3P 400V 3P 480V 3P 690V 3P Grinding wheel Diamond dresser Collet R16 Concentrated coolant Transformer 480/400V 690/400V Servicing tools	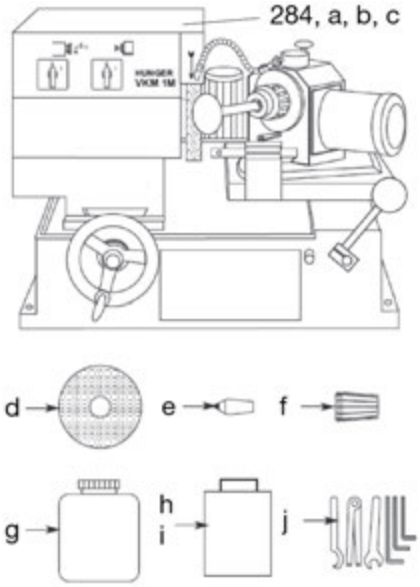		 1 1 1 1 1 1 1 1 1 1 1	 284 284a 284b 284c 284d 284e 284f 284g 284h 284i 284j
Reamer for valve guide	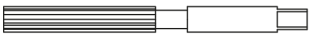		1	748

2025-02-07 - en

Name	Sketch	Supply per ship		Item no
		Working	Spare	
Electronic Pmax indicator, Kistler			1	903

Piston, connecting rod and cylinder liner

Name	Sketch	Supply per ship		Item no
		Working	Spare	
Ridge wear kit, complete Engineering blue Black stone Layer thickness gauge	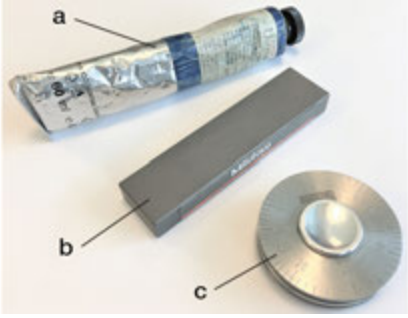		1 1 1 1	018 018a 018b 018c
Outside micrometer	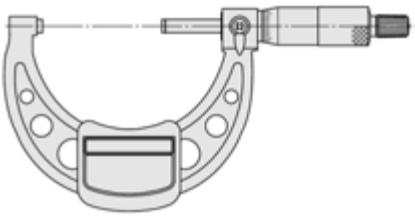		1	019
Tools for low overhaul height of piston, connecting rod and cylinder liner Pull lift Lifting tool for cylinder liner Collar for connecting rod Shackle	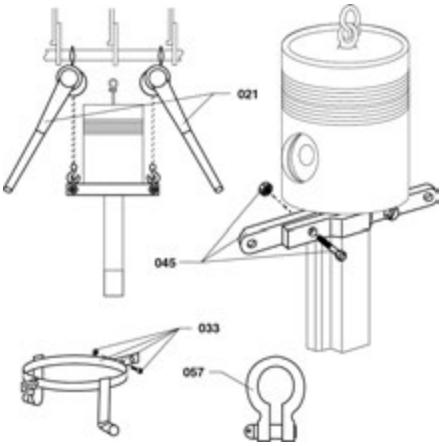		1 1 1 1 1	655 021 033 045 057

2025-02-07 - en

Name	Sketch	Supply per ship		Item no
		Working	Spare	
Pneumatic impact spanner			1	415
Inside micrometer (cylinder liner): measuring range 225-250 mm			1	618
Inside micrometer (connecting rod): measuring range 175-200 mm			1	631

Operating gear for valves and fuel injection pumps

Name	Sketch	Supply per ship		Item no
		Working	Spare	
Adjustment tool for roller guide housing	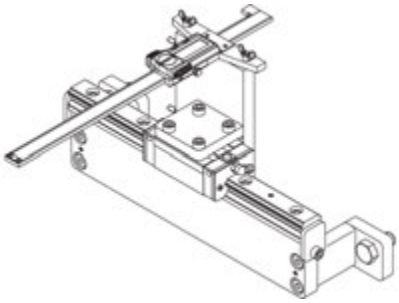		1	041

Control and safety systems - automatics and instruments

Name	Sketch	Supply per ship		Item no
		Working	Spare	
Infrared thermometer			1	727

2025-02-07 - en

Name	Sketch	Supply per ship		Item no
		Working	Spare	
Calibration tool			1	728

Crankshaft and main bearings

Name	Sketch	Supply per ship		Item no
		Working	Spare	
Eye screw for lifting of tuning wheel	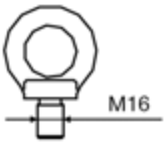		1	667
Mounting tool for damper For engine types L23/30H, L23/30H Mk2	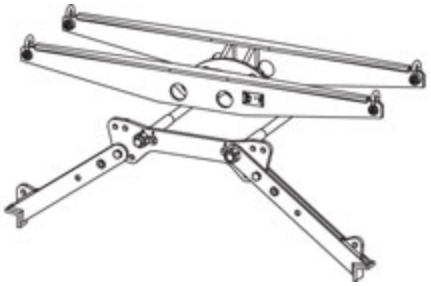		1	250a
Mounting tool for damper For engine type L23/30H Mk3			1	250b

2025-02-07 - en

Turbocharger system

Name	Sketch	Supply per ship Working	Spare	Item no
Differential pressure tools complete Hose Nipple Nipple			1 1 2 2	915 915a 915b 915c

Compressed air system

Name	Sketch	Supply per ship		Item no
		Working	Spare	
Set of tools, TDI air starter T50			1	928

Fuel oil system and injection equipment

Name	Sketch	Supply per ship Working	Spare	Item no
Grinding tool for fuel injection valve	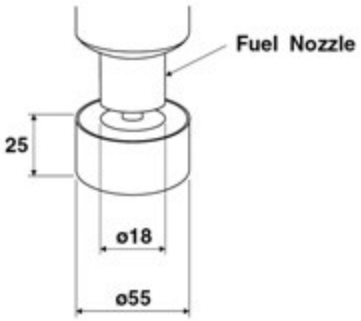		1	300

2025-02-07 - en

3700404-4.11

Name	Sketch	Supply per ship Working	Spare	Item no
Tools for fuel injection pump, complete consisting of the following: Calibration ring, pushing device, guide device Hose clamps	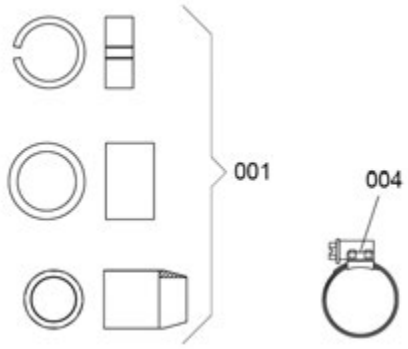		1	037 001 004
Mounting tool for seals, plunger complete (only sealed plunger/ barrel) Screw Screw Mounting tool Mounting tool Mounting tool O-ring	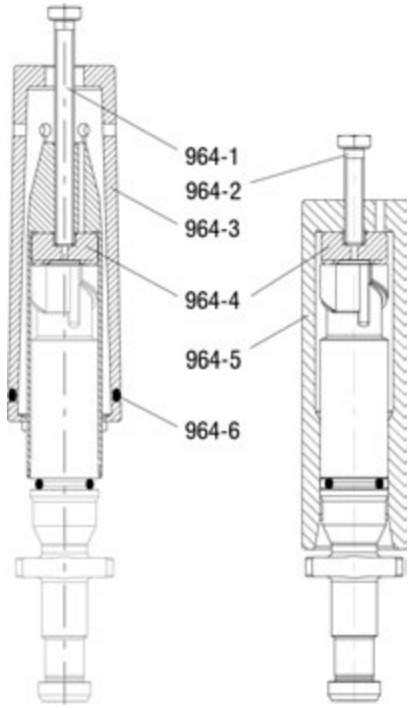		1	964 964-1 964-2 964-3 964-4 964-5 964-6
Extractor for bush, sogav valve	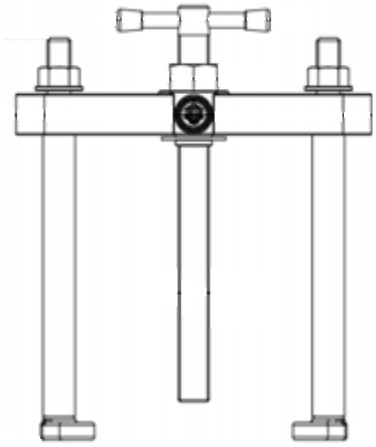		1	976

Additional tools
Description

2025-02-07 - en

Name	Sketch	Supply per ship Working	Spare	Item no
Extractor for bush, sogav valve	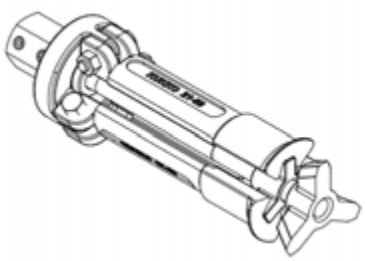		1	977

Lubricating oil system

Name	Sketch	Supply per ship		Drawing	Remarks
		Working	Spare	Item no	
Gun for 2-component glue			1	990	

Hydraulic tools

Name	Sketch	Supply per ship Working	Spare	Item no
Air driven high pressure pump for hydraulic tools	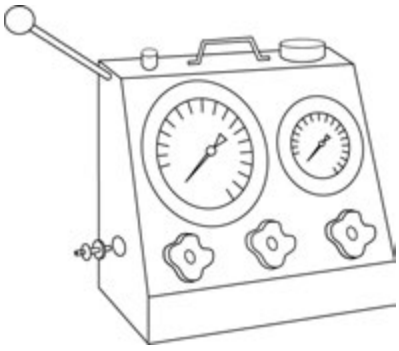		1	608

2025-02-07 - en

Name	Sketch	Supply per ship Working	Spare	Item no
Remote controlled unit for hydraulic bolt tensioning			1	939

2025-02-07 - en

Hand tools

Hand tools

Name	Sketch	Supply per ship		Drawing	Remarks
		Working	Spare	Item no	
Set of tools, consists of: Item 01 Ratchet Item 02 Extension, 125 mm Item 03 Extension, 250 mm Item 04 Universal Item 05, Sockets double hexagon, 10 mm double hexagon, 13 mm double hexagon, 17 mm double hexagon, 19 mm double hexagon, 22 mm internal hexagon, 5 mm internal hexagon, 6 mm internal hexagon, 7 mm internal hexagon, 8 mm internal hexagon, 10 mm internal hexagon, 12 mm screw driver, 1.6x10 mm cross head screw, 2 mm cross head screw, 3 mm cross head screw, 4 mm	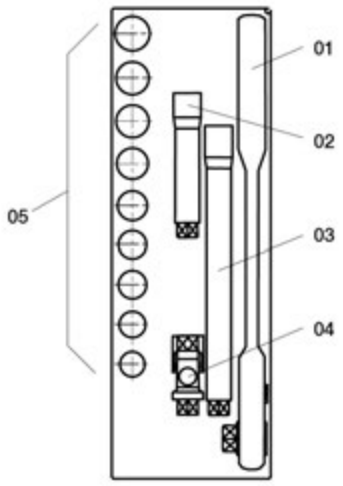		1	019	
Combination spanner, 10 mm	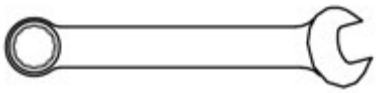		1	032	
Combination spanner, 12 mm			1	044	
Combination spanner, 13 mm			1	056	
Combination spanner, 14 mm			1	068	
Combination spanner, 17 mm			1	081	
Combination spanner, 19 mm			1	093	
Combination spanner, 22 mm			1	103	
Combination spanner, 24 mm			1	115	
Combination spanner, 30 mm			1	127	
Combination spanner, 16 mm			1	223	

2019-09-05 - en

3700415-2.0

Name	Sketch	Supply per ship		Drawing	Remarks
		Working	Spare	Item no	
Combination spanner, 18 mm			1	235	
Combination spanner, 27 mm			1	402	
Combination spanner, 32 mm			1	414	
Combination spanner, 36 mm			1	426	
Combination spanner, 41 mm			1	438	
Combination spanner, 46 mm			1	451	
Tee handle 1/2" square drive	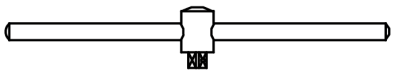		1	139	
Ratchet, 20 mm	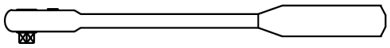		1	140	
Extension bar			1	152	
Socket spanner, square drive, size 24			1	164	
Socket spanner, square drive, size 30			1	176	
Socket spanner, square drive, size 36			1	188	
Bit, hexagon socket screw, square drive, size 8			1	247	
Bit, hexagon socket screw, square drive, size 10			1	259	

Hand tools
Description

2019-09-05 - en

Name	Sketch	Supply per ship		Drawing	Remarks
		Working	Spare	Item no	
Bit, hexagon socket screw, square drive, size 12			1	260	
Torque spanner, 20-120 Nm - 1/2"			1	272	
Torque spanner, 40-200 Nm - 1/2"			1	284	
Torque spanner, 60-320 Nm - 1/2"			1	296	
Hexagon key 7 mm			1	331	
Hexagon key 8 mm			1	343	
Hexagon key 10 mm			1	355	
Hexagon key 12 mm			1	367	
Hexagon key 14 mm			1	379	
Hexagon key 17 mm			1	380	
Hexagon key 19 mm			1	392	

2019-09-05 - en

This page is intentionally left blank

2019-09-05 - en

Information from the alternator supplier

Installation aspects

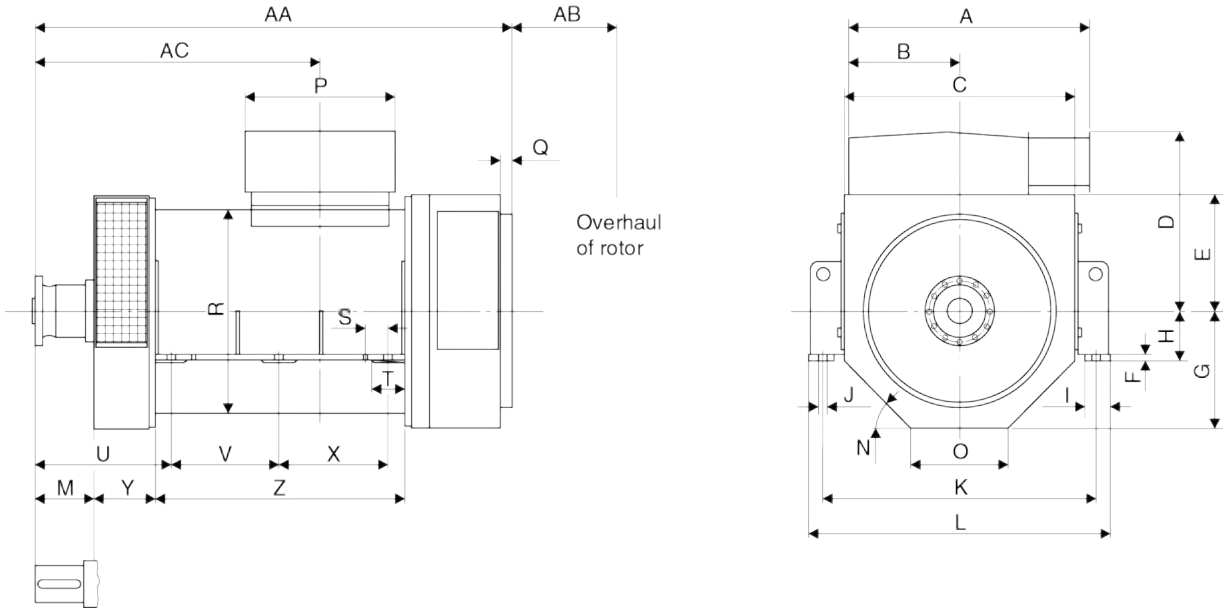

Figure 1: Outline drawing of alternator

Dimensions

Engine Types	H	I	øJ	K	L	M (min)
5-6 Cyl.	230	120	39	1280	1380	230
7-8 Cyl.	230	160	39	1500	1600	230

For mounting of diesel engine and alternator on a common base frame, the alternator supplier should fullfill the dimensions given in fig. 1. Further, inspection shutters, components and other parts to be operated/maintained should not be placed below the level of the alternator feet on front edge of, and in the longitudinal direction of the alternator in the area covered by the base frame.

Regarding air cooled alternators, the ventilating outlet should be placed above the level of the alternator feet. For water cooled alternators the flanges for cooling water should be placed on the left side of the alternator seen from the shaft end. The flanges should be with counter flanges.

Project information

3 sets of Project Information should be forwarded to MAN Diesel & Turbo, according to the delivery times stated in "Extent of Delivery".

Drawings included in the alternator Project Information must have a max. size of A3.

Project Information should as a minimum contain the following documentation:

2014-04-10 - en

1. General description of alternator

2. "outline" drawing

Following information is required in order to be able to work out drawings for base frame and general arrangement of GenSet.

Side view and view of driving end with all main dimensions, i.e. length, width, height, foot position, foot width, shaft height, etc. as well as all the dimensions of the alternator's coupling flange, alt. groove shaft pin.

As minimum all the dimensions in fig. 1 should be stated.

Further the "outline" drawing is to include alternator type, total weight with placement of center of gravity in 2 directions (horizontal and vertical), direction of revolution, terminal box position, lifting eyes venthole position for air cooled alternators and min. overhaul space for rotor, cooler, filter, etc.

a. For water cooled alternators following information is required:

- position of connections
- dimension of connections
- dimensions of flange connections
- cooling water capacity
- cooling water temperature
- heat dissipation
- cooling water pressure loss across heat exchanger
- Amount of water in alt. cooling system

b. For alternators with extern lubricating of bearing(s) following information is required:

- position of connections
- dimension of connections
- dimensions of flange connections
- required lub. oil flow
- required lub. oil pressure
- pressure regulator (if required/delivered)
- oil sight glas (if required/delivered)

c. For air cooled alternators following information is required:

- Max. permissible ambient inlet air temp.

3. Rotor shaft drawing

Following information is required in order to be able to work out torsional vibration calculations for the complete GenSet.

The rotor shaft drawing must show all the dimensions of the rotor shaft's lengths and diameters as well as information about rotor parts with regard to mass inertia moment - GD^2 or J (kgm^2) and weight (kg).

2014-04-10 - en

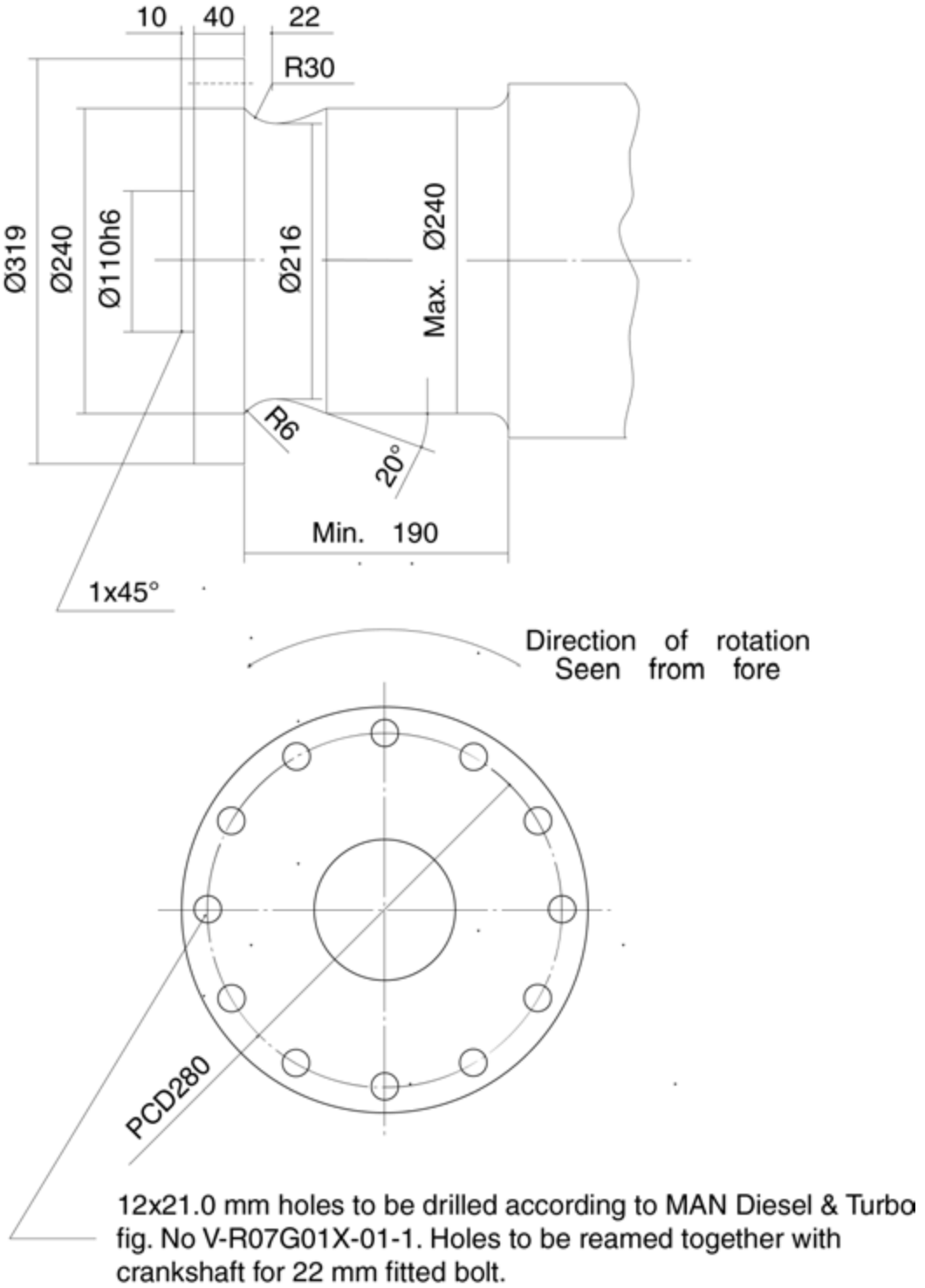

Figure 2: Shaft dimension for alternator, type B16

The following components, which are part of the complete rotor, must be mentioned:

- Shaft
- Pole wheel
- Exciter
- Ventilator

2014-04-10 - en

The shaft dimensions for alternator should be ac-cording to figure 2 or 3.

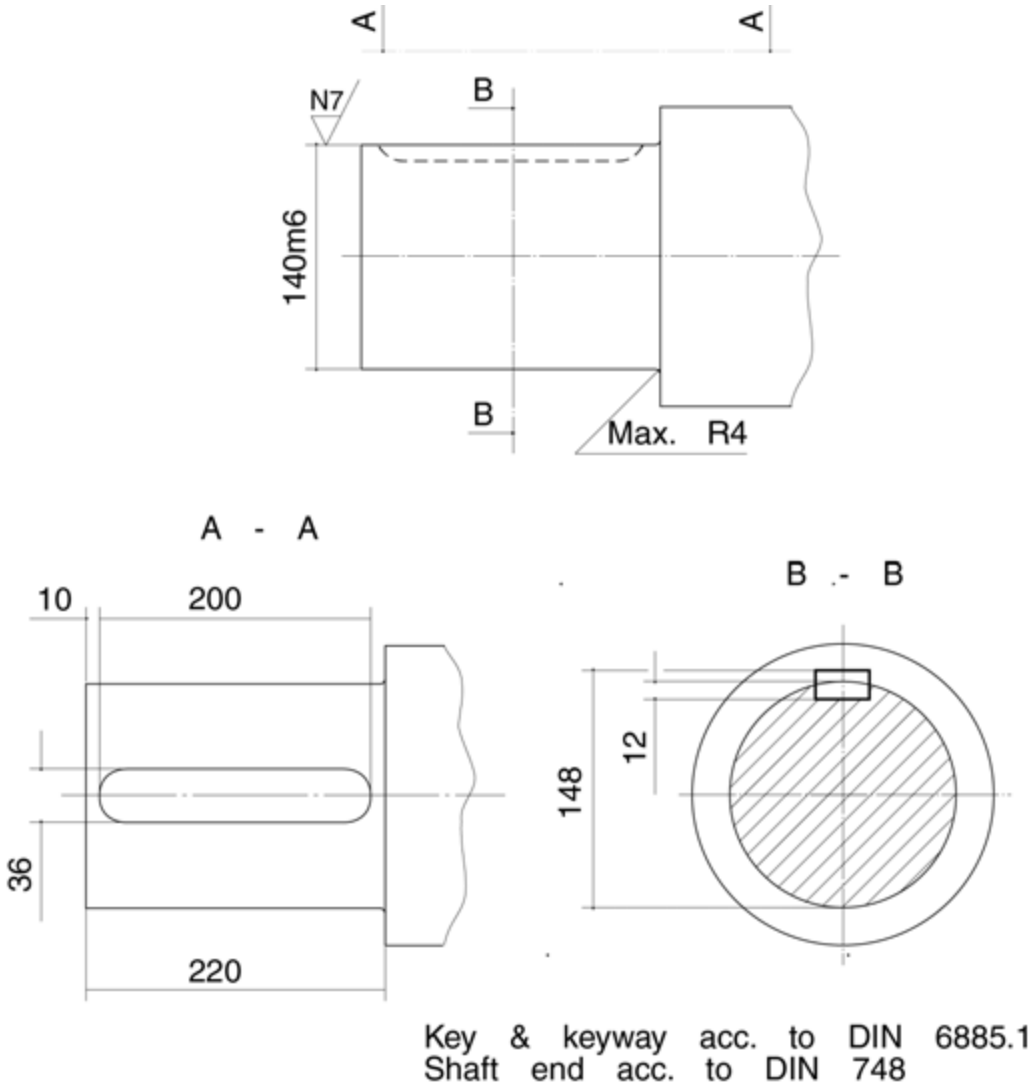

Figure 3: Shaft dimension for alternator, type B20

4. Other drawings necessary for installation.

5. Spare parts list.

6. List of loose supplied components.

7. Data:

- Construction form
- Rated voltage
- Rated power kVA
- Rated current, amp
- Rated power factor
- Frequency, Hz
- Insulation class

2014-04-10 - en

- Load efficiency in % of nominal load at 1/4 - 1/2 - 3/4 - 1/1 load (with cos.phi. = 0.8 and 1.0)
- If the alternator bearings are lubricated by the engines' intermal lub. oil system:
  - Max lub. oil pressure
  - Lub. oil capacity (m^3/h)
  - Heat radiation

Besides the above-mentioned documentation, 3 sets of alternator test reports should be forwarded.

In connection with the delivery of alternator, documentation and spare parts, these should be specified with our order no. and the specific yard or project identification.

For further information, please contact MAN Diesel & Turbo.

2014-04-10 - en

This page is intentionally left blank

2014-04-10 - en

Engine/Alternator type

General

Engine speed 720/750/900 RPM				
Cylinder	Standard		Alternative option	
	Alternator type	Requirements	Alternator type	Requirements
5 Cyl. 720/750 rpm (all)	B 16	None	B 20	Elastic coupling
6 Cyl. 720/750/900 rpm (all)	B 16	None	B 20	Elastic coupling
7 Cyl. 720/750/900 rpm (all except L23/30H Mk2)	B 16	None	B 20	Elastic coupling
7 Cyl. 900 rpm (L23/30H Mk2)	B 20	Elastic coupling	-	-
8 Cyl. 720/750/900 rpm (all)	B 16	None	B 20	Elastic coupling
9 Cyl. 720/750/900 rpm (L23/30H Mk3)	B 16	None	B 20	Elastic coupling

Alternator type B 16

One bearing type, shaft end with flange.

Alternator type B 20

Two bearing types, shaft end with keyway.

One bearing shall be of the guide bearing type.

Note for Re-engineering

In case of using an existing alternator, calculation for torsional vibrations has to be carried out before determination concerning intermediate bearing and elastic coupling can be established.

2020-02-28 - en

This page is intentionally left blank

2020-02-28 - en

Alternator cable installation

Description

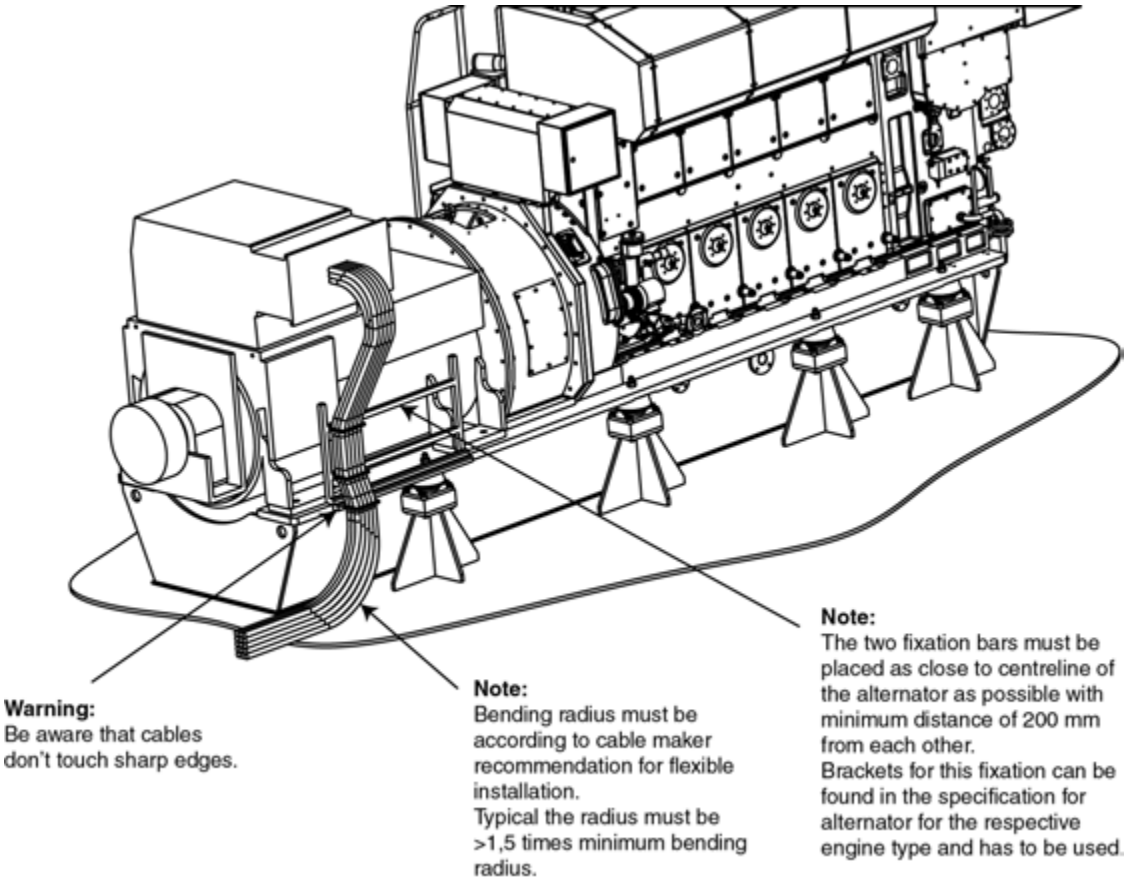

Figure 1: Connection of cables (example)

Main cables

The resilient installation of the GenSet must be considered when fixing the alternator cables.

The cables must be installed so that no forces have any effect on the terminal box of the alternator.

A support bracket can be welded on the engine base frame. If this solution is chosen, the flexibility in the cables must be between the cable tray and the support bracket.

The free cable length from the cable tray to the attachment on the alternator must be appropriate to compensate for the relative movements between the GenSet and the foundation.

The following can be used as a guideline:
The fix point of the alternator cables must be as close as possible to the centre line of the rotor.

Bending of the cables must follow the recommendations of the cable supplier regarding minimum bending radius for movable cables.

2025-01-21 - en

If questions arise concerning the above, please do not hesitate to contact MAN Energy Solutions.

Note: The responsibility for alternator cable installation lies with the Installation Contractor. The Installation Contractor has to define the dimension of the cables with due respect to heat conditions at site, cable routing (nearby cables), number of single wires per phase, cable material and cable type.

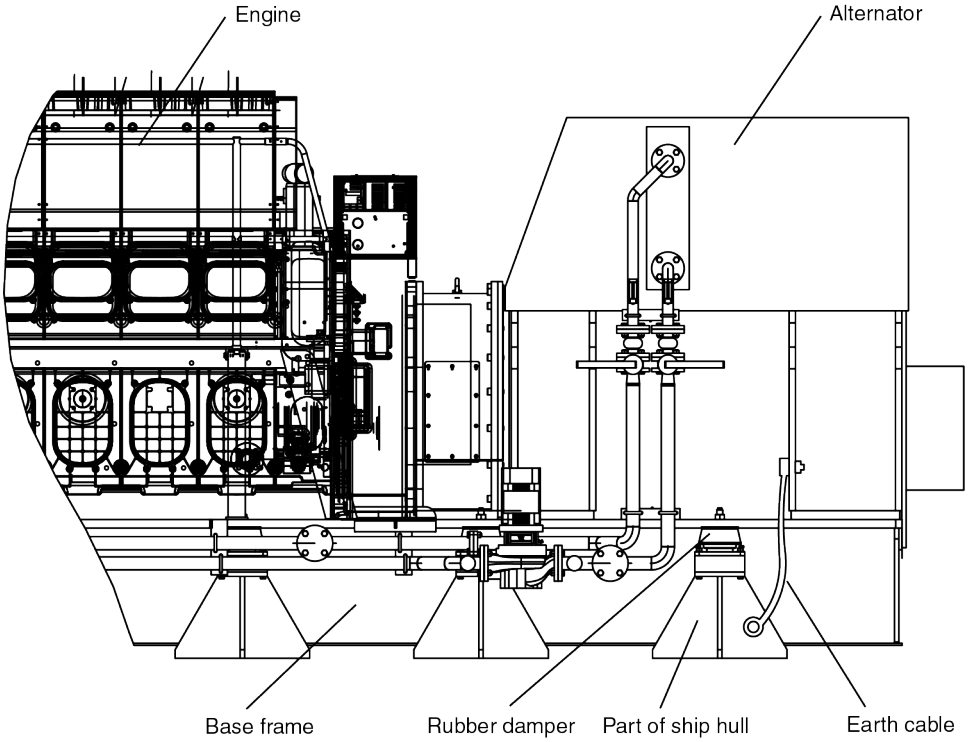

Figure 2: Marine operation (example)

Binding radius has to be observed, and furthermore binding radius for cables used for resilient installed engines must be observed.

Earth cable connection

It is important to establish an electrical connecting across the rubber dampers. The earth cable must be installed as a connection between alternator and ship hull for marine operation, and as a connection between alternator and foundation for stationary operation.

For stationary operation, the Contractor must ensure that the foundation is grounded according to local legislation.

Engine, base frame and alternator have internal metallic contact to ensure earth connection. The size of the earth cable is to be calculated on the basis of output and safety conditions in each specific case; or must as a minimum have the same size as the main cables.

2025-01-21 - en

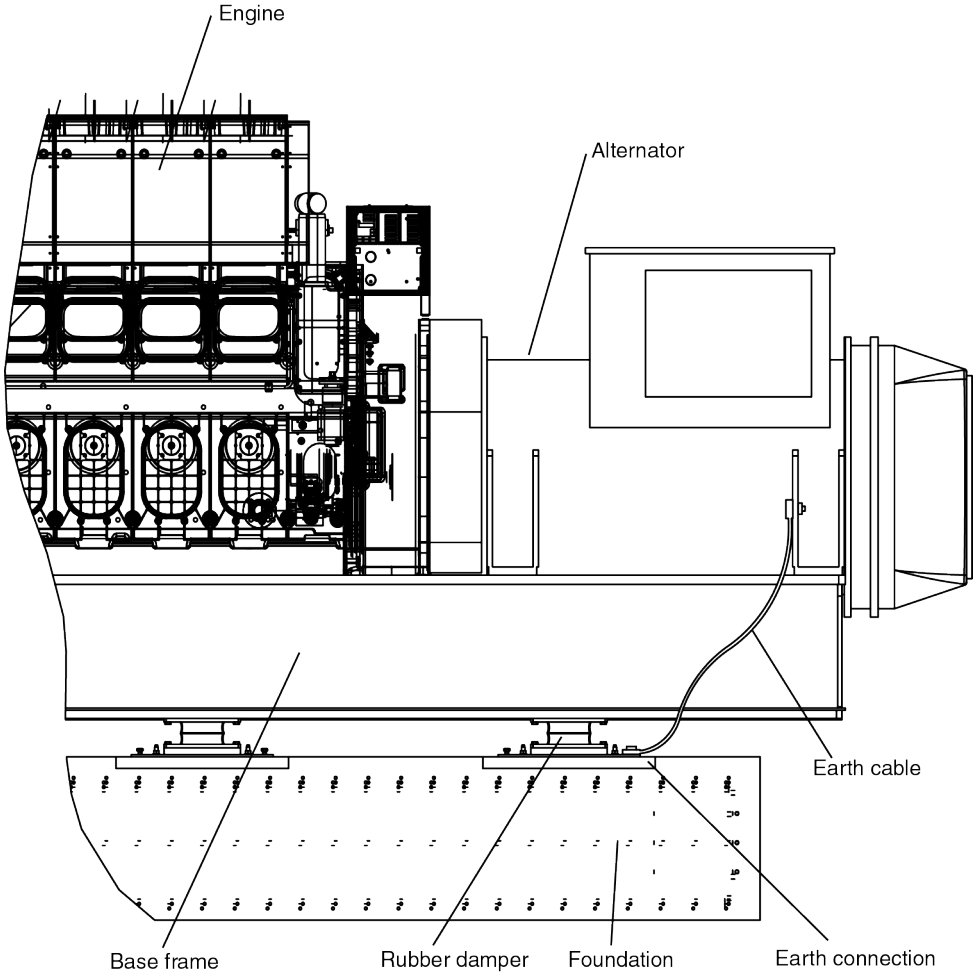

Figure 3: Stationary operation (example)

2025-01-21 - en

This page is intentionally left blank

2025-01-21 - en

Combinations of engine- and alternator layout

L23/30H Mk1 L23/30S Mk 1 L23/30H Mk1, Monocoque	1-bearing, air cooled	1-bearing, water cooled	2-bearing, air cooled	2-bearing, water cooled
5 Cyl. 720 RPM	• 2)	1)	2)	1)
5 Cyl. 750 RPM	• 2)	1)	2)	1)
6 Cyl. 720 RPM	•	#	#	#
6 Cyl. 750 RPM	•	#	#	#
6 Cyl. 900 RPM	•	#	#	#
7 Cyl. 720 RPM	•	#	#	#
7 Cyl. 750 RPM	•	#	#	#
7 Cyl. 900 RPM	•	#	#	#
8 Cyl. 720 RPM	•	#	#	#
8 Cyl. 750 RPM	•	#	#	#
8 Cyl. 900 RPM	•	#	#	#

L23/30H Mk 2 L23/30S Mk 2	1-bearing, air cooled	1-bearing, water cooled	2-bearing, air cooled	2-bearing, water cooled
5 Cyl. 720 RPM	• 2)	1)	2)	1)
5 Cyl. 750 RPM	• 2)	1)	2)	1)
6 Cyl. 720 RPM	•	#	#	#
6 Cyl. 750 RPM	•	#	#	#
6 Cyl. 900 RPM	•	#	#	#
7 Cyl. 720 RPM	•	#	#	#
7 Cyl. 750 RPM	•	#	#	#
7 Cyl. 900 RPM	X	X	•	#
8 Cyl. 720 RPM	•	#	#	#
8 Cyl. 750 RPM	•	#	#	#
8 Cyl. 900 RPM	•	#	#	#

L28/32H L28/32DF L28/32S	1-bearing, air cooled	1-bearing, water cooled	2-bearing, air cooled	2-bearing, water cooled
5 Cyl. 720 RPM	•	#	#	#
5 Cyl. 750 RPM	•	#	#	#
6 Cyl. 720 RPM	•	#	#	#
6 Cyl. 750 RPM	•	#	#	#
7 Cyl. 720 RPM	X	X	•	#
7 Cyl. 750 RPM	X	X	•	#
8 Cyl. 720 RPM	X	X	•	#
8 Cyl. 750 RPM	X	X	•	#
9 Cyl. 720 RPM	•	#	#	#
9 Cyl. 750 RPM	•	#	#	#

Monocoque: L23/30H Mk 2 L23/30DF	1-bearing, air cooled	1-bearing, water cooled	2-bearing, air cooled	2-bearing, water cooled
5 Cyl. 720 RPM	•	#	#	#
5 Cyl. 750 RPM	•	#	#	#
6 Cyl. 720 RPM	•	#	#	#
6 Cyl. 750 RPM	•	#	#	#
6 Cyl. 900 RPM	•	#	#	#
7 Cyl. 720 RPM	•	#	#	#
7 Cyl. 750 RPM	•	#	#	#
7 Cyl. 900 RPM	X	X	•	#
8 Cyl. 720 RPM	•	#	#	#
8 Cyl. 750 RPM	•	#	#	#
8 Cyl. 900 RPM	•	#	#	#

For a GenSet the engine and alternator are fixed on a common base frame, which is flexibly installed. This is to isolate the GenSet vibration-wise from the environment. As part of the GenSet design a full FEM calculation has been done and due to this and our experience some combinations of engine type and alternator type concerning one - or two bearings must be avoided. In the below list all combinations can be found.

Comments to possible combinations:

• : Standard
: Option
X : Not recommended
1) : Only in combination with "top bracing" between engine crankcase and alternator frame
2) : Need for 'topbracing' to be evaluated case by case

2023-09-12 - en

3700084-3.13

Combinations of engine- and alternator layout

Description

Monocoque: L23/30H Mk 3	1-bearing, air cooled	1-bearing, water cooled	2-bearing, air cooled	2-bearing, water cooled
5 Cyl. 720 RPM	•	#	#	#
5 Cyl. 750 RPM	•	#	#	#
6 Cyl. 720 RPM	•	#	#	#
6 Cyl. 750 RPM	•	#	#	#
6 Cyl. 900 RPM	•	#	#	#
7 Cyl. 720 RPM	•	#	#	#
7 Cyl. 750 RPM	•	#	#	#
7 Cyl. 900 RPM	•	#	#	#
8 Cyl. 720 RPM	•	#	#	#
8 Cyl. 750 RPM	•	#	#	#
8 Cyl. 900 RPM	•	#	#	#
9 Cyl. 720 RPM	•	#	#	#
9 Cyl. 750 RPM	•	#	#	#
9 Cyl. 900 RPM	•	#	#	#

L16/24 L16/24S	1-bearing, air cooled	1-bearing, water cooled	2-bearing, air cooled	2-bearing, water cooled
5 Cyl. 1000 RPM	•	#	#	#
5 Cyl. 1200 RPM	•	#	#	#
6 Cyl. 1000 RPM	•	#	#	#
6 Cyl. 1200 RPM	•	#	#	#
7 Cyl. 1000 RPM	•	#	#	#
7 Cyl. 1200 RPM	•	#	#	#
8 Cyl. 1000 RPM	•	#	#	#
8 Cyl. 1200 RPM	•	#	#	#
9 Cyl. 1000 RPM	•	#	#	#
9 Cyl. 1200 RPM	•	#	#	#

L21/31 L21/31S L21/31 Mk2	1-bearing, air cooled	1-bearing, water cooled	2-bearing, air cooled	2-bearing, water cooled
5 Cyl. 900 RPM	•	#	#	#
5 Cyl. 1000 RPM	•	#	#	#
6 Cyl. 900 RPM	•	#	#	#
6 Cyl. 1000 RPM	•	#	#	#
7 Cyl. 900 RPM	•	#	#	#
7 Cyl. 1000 RPM	•	#	#	#
8 Cyl. 900 RPM	X	X	•	#
8 Cyl. 1000 RPM	X	X	•	#
9 Cyl. 900 RPM	X	X	•	#
9 Cyl. 1000 RPM	X	X	•	#

L27/38 L27/38S	1-bearing, air cooled	1-bearing, water cooled	2-bearing, air cooled	2-bearing, water cooled
5 Cyl. 720 RPM	•	#	#	#
5 Cyl. 750 RPM	•	#	#	#
6 Cyl. 720 RPM	•	#	#	#
6 Cyl. 750 RPM	•	#	#	#
7 Cyl. 720 RPM	•	#	#	#
7 Cyl. 750 RPM	•	#	#	#
8 Cyl. 720 RPM	X	X	•	#
8 Cyl. 750 RPM	X	X	•	#
9 Cyl. 720 RPM	X	X	•	#
9 Cyl. 750 RPM	X	X	•	#

V28/32S	1-bearing, air cooled	1-bearing, water cooled	2-bearing, air cooled	2-bearing, water cooled
12 Cyl. 720 RPM	X	X	•	1)
12 Cyl. 750 RPM	X	X	•	1)
16 Cyl. 720 RPM	X	X	•	1)
16 Cyl. 750 RPM	X	X	•	1)
18 Cyl. 720 RPM	X	X	•	1)
18 Cyl. 750 RPM	X	X	•	1)

2023-09-12 - en

Lifting instruction

Lifting of Complete Generating Sets.

The generating sets should only be lifted in the two wire straps. Normally, the lifting tools and the wire straps are mounted by the factory. If not, it must be observed that the fixing points for the lifting tools are placed differently depending on the number of cylinders.

After installation the lifting tools are to be removed.

Remount brackets.

Lifting tool

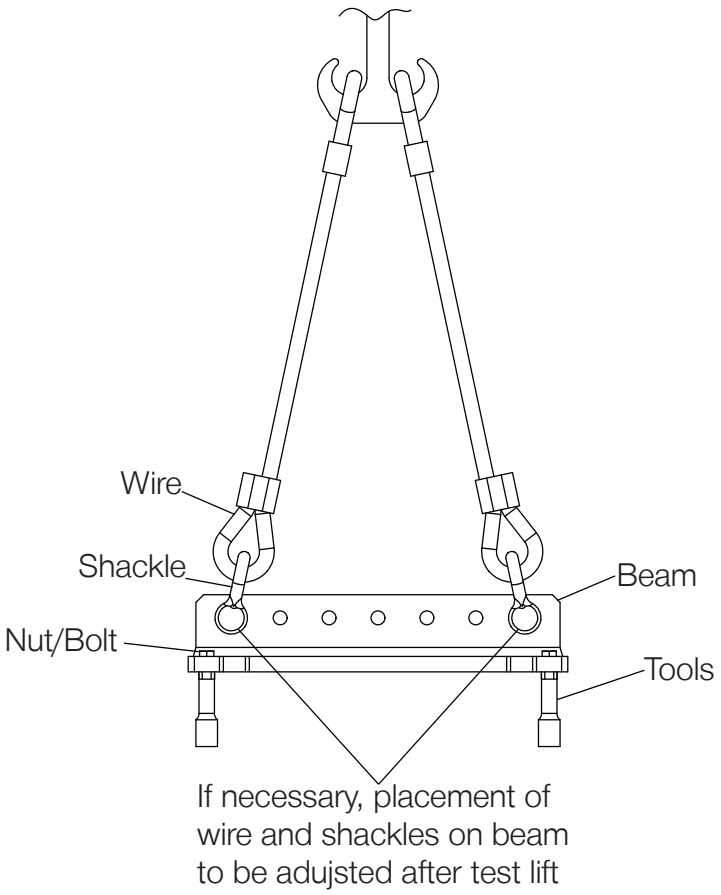

Figure 1: Lifting tool

2022-12-22 - en

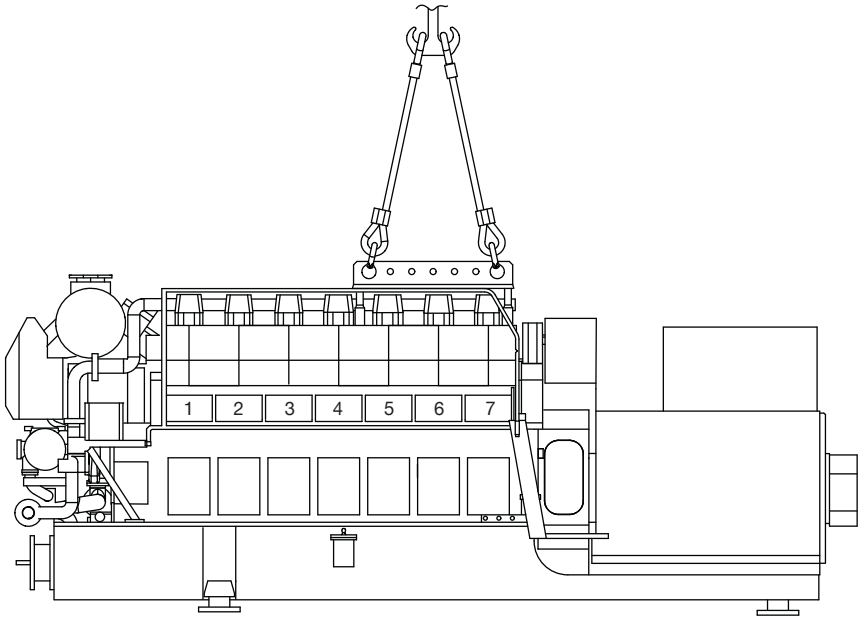

Figure 2: Lifting tools' and wires placing on engine

Engine type	4xLifting tool to be mounted on cyl. bolt No from front	
5L23/30	4	10
6L23/30	6	12
7L23/30	8	14
8L23/30	9	15
9L23/30	10	16

Based on MAN Energy Solutions standard alternator.

2022-12-22 - en